FURUNO

Installation Manual
Multi Function Display
Model MFD8/MFD12

NAVnet 3D

FURUNO ELECTRIC CO., LTD.

www.furuno.com

SAFETY INSTRUCTIONS

The user and installer must read the appropriate safety instructions before attempting to install or operate the equipment.

WARNING	Indicates a potentially hazardous situation which, if not avoided, could result in death or serious injury.
CAUTION	Indicates a potentially hazardous situation which, if not avoided, may result in minor or moderate injury.

Warning, Caution Prohibitive Action Mandatory Action

WARNING

ELECTRICAL SHOCK HAZARD
Do not open the equipment unless totally familiar with electrical circuits.

Only qualified personnel should work inside the equipment.

Turn off the power at the switchboard before beginning the installation.

Fire or electrical shock can result if the power is left on.

Be sure that the power supply is compatible with the voltage rating of the equipment.

Connection of an incorrect power supply can cause fire or damage the equipment.

CAUTION

Ground the equipment to prevent electrical shock and mutual interference.

Use the proper fuse.

Use of an incorrect fuse may damage the equipment.

Observe the following compass safe distances to prevent interference to a magnetic compass:

	Standard compass	Steering compass
MFD8	0.90 m	0.60 m
MFD12	0.85 m	0.55 m

NOTICE

This unit cannot be used as an input signal to equipment that requires interval input and accuracy such as an autopilot.

SYSTEM CONFIGURATION

MFD8

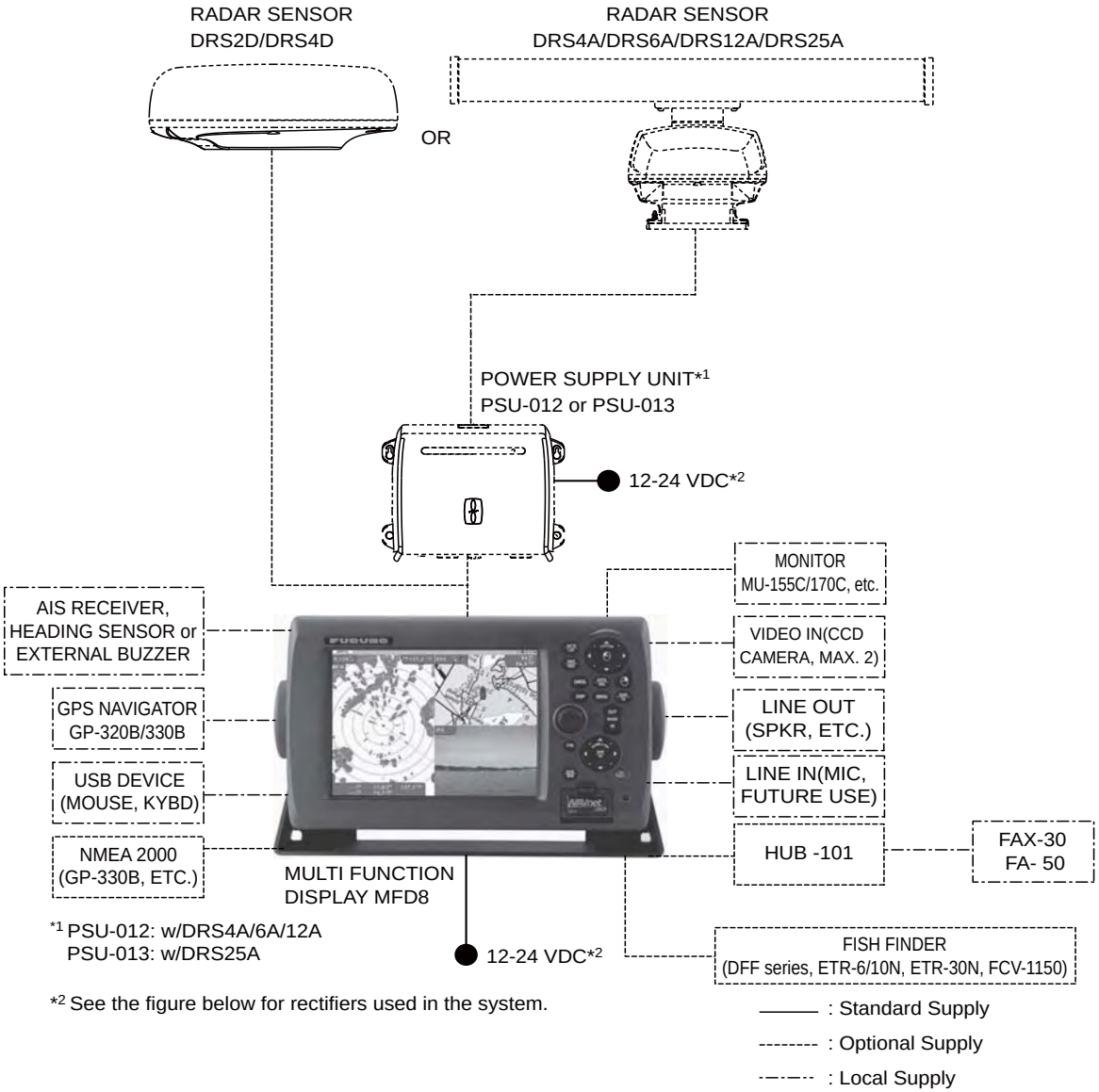

*1 PSU-012: w/DRS4A/6A/12A
PSU-013: w/DRS25A

*2 See the figure below for rectifiers used in the system.

Rectifiers used in the system

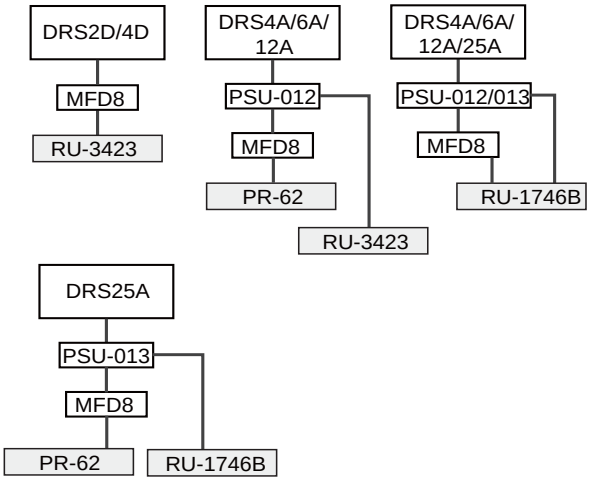

MFD12

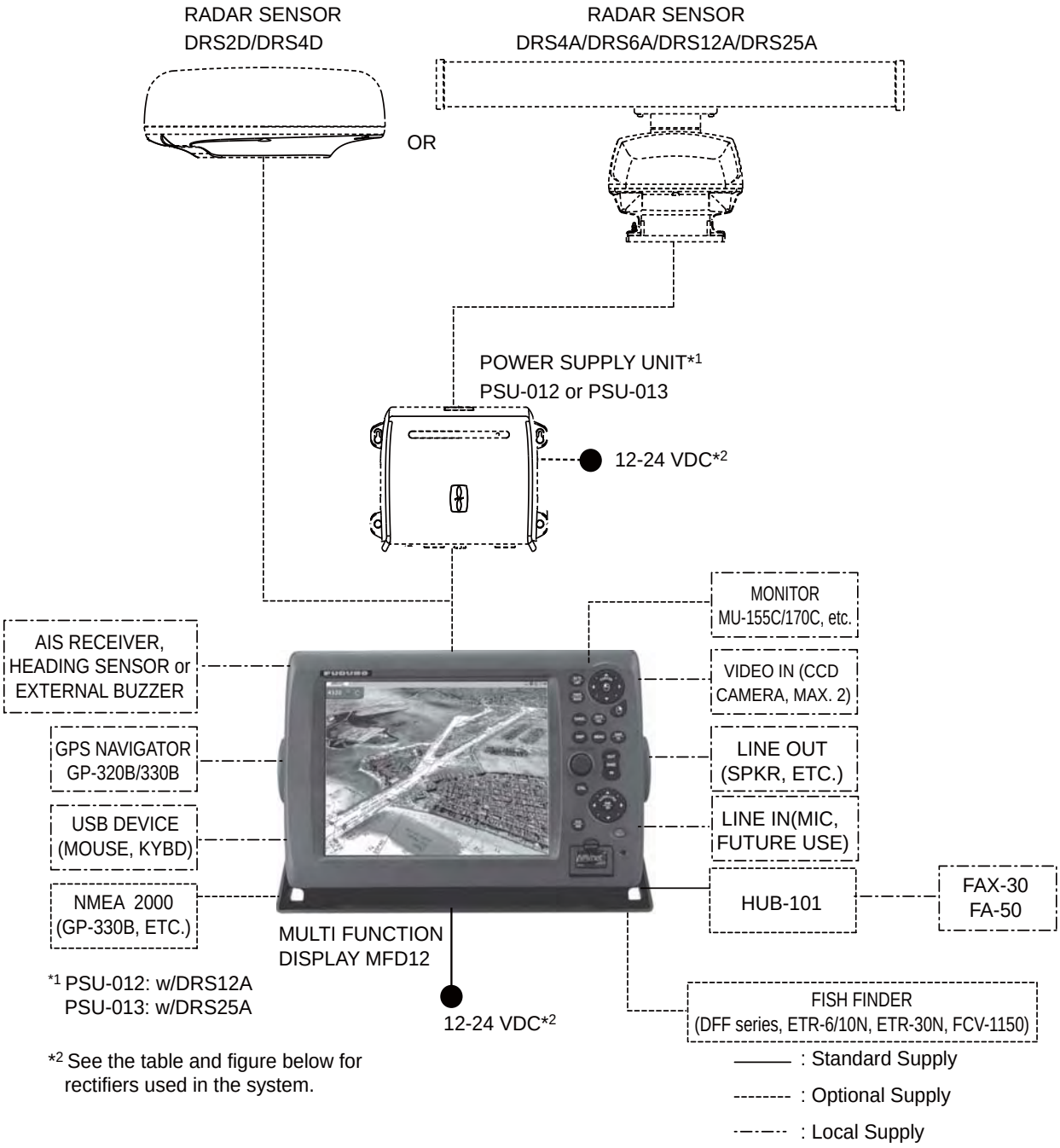

Rectifiers used in the system

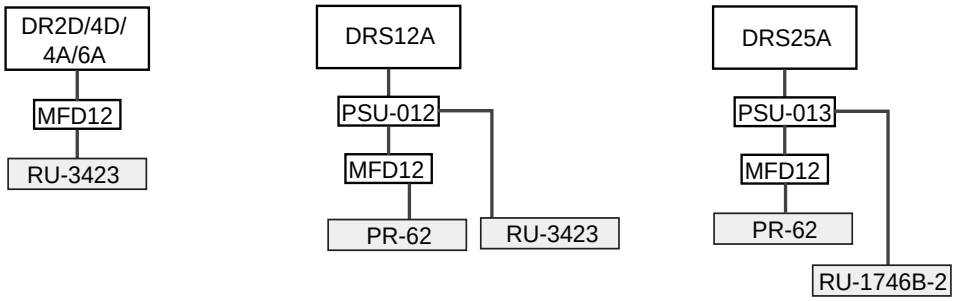

EQUIPMENT LISTS

Standard supply

Name	Type	Code No.	Qty	Remarks
Multi Function Display	MFD8	-	1	Choose one.
	MFD12	-		
Instalaltion materials	CP19-00900	000-011-780	1 set	For MFD8, CP19-00901*, cables
	CP19-01000	000-011-781		For MFD12, CP19-01001*, cables
Spare Parts	SP19-00701	001-028-020	1 set	For MFD8, fuses
	SP19-00801	001-028-030		For MFD12, fuses
Accessories	FP19-01101	001-023-060	1 set	Panel remover

*See the lists at the back of this manual.

Optional supply

Name	Types	Code No.	Remarks
Cable Assy	MJ-A7SPF0007-050C	000-154-028-10	5 m, NMEA0183, w/connector
	M12-05BM+05BF-010	000-167-962-10	φ6, 1 m, NMEA2000, w/micro connectors
	M12-05BM+05BF-020	000-167-963-10	φ6, 2 m, NMEA2000, w/micro connectors
	M12-05BM+05BF-060	000-167-964-10	φ6, 6 m, NMEA2000, w/micro connectors
	M12-05BFFM-010	000-167-965-10	φ6, 1 m, NMEA2000, w/micro connector
	M12-05BFFM-020	000-167-966-10	φ6, 2 m, NMEA2000, w/micro connector
	M12-05BFFM-060	000-167-967-10	φ6, 6 m, NMEA2000, w/micro connector
	CB-05PM+05BF-010	000-167-968-10	φ10, 1 m, NMEA2000, w/ micro connectors
	CB-05PM+05BF-020	000-167-969-10	φ10, 2 m, NMEA2000, w/ micro connectors
	CB-05PM+05BF-060	000-167-970-10	φ10, 6 m, NMEA2000, w/ micro connectors
	CB-05BFFM-010	000-167-971-10	φ10, 1 m, NMEA2000, w/ micro connector
	CB-05BFFM-020	000-167-972-10	φ10, 2 m, NMEA2000, w/ micro connector
	CB-05BFFM-060	000-167-973-10	φ10, 6 m, NMEA2000, w/ micro connector

Name	Types	Code No.	Remarks
Cable Assy	MOD-Z072-020+	000-167-175-10	LAN cross, 4-pair, 2 m
	MOD-Z072-050+	000-167-176-10	LAN cross, 4-pair, 5 m
	MOD-Z072-100+	000-167-177-10	LAN cross, 4-pair, 10 m
	MOD-Z073-030+	000-167-171-10	LAN straight, 2-pair, 3 m
	MJ-A6SPF0016-005C	000-159-689-11	For FAX-30, ETR6N/10N connection
NMEA Connector	LTWSS050505FMF-TS001	000-168-603-10	NMEA 2000 distributor, micro style
	LTWMC-05BMMT-SL8001	000-168-604-10	NMEA 2000 terminator, male, micro style
	LTWMC-05BFFT-SL8001	000-168-605-10	NMEA 2000 terminator, female, micro style
	LTWNC050505FMF-TS001	000-160-507-10	NMEA 2000 distributor, mini style
	LTWMN-05AMMT-SL8001	000-160-508-10	NMEA 2000 terminator, mini style
	LTWMN-05AFFT-SL8001	000-160-509-10	NMEA 2000 terminator, female, mini style
In-line Terminator	FRU-0505-FF-IS	000-172-037-10	NMEA 2000 connector w/terminator, micro style
DVI-D Cable	DVI-D/D SINGLELINK	000-149-054-10	5 m, for Multi-purpose LCD connection
	DVI-D/D S-LINK	000-150-200-10	10 m, for Multi-purpose LCD connection
External Buzzer	OP03-136	000-086-443	
Junction Box	FI-5002	000-010-765	For FI-50 series connection
Rectifier	RU-3423	000-030-443	w/o PSU-012
	PR-62	000-013-484	100VAC, w/PSU-012
		000-013-485	110VAC, w/PSU-012
		000-013-486	220VAC, w/PSU-012
		000-013-487	230VAC, w/PSU-012
	RU-1746B-2	000-030-439	220VAC -For PSU-012 and MFD -PSU-013
Network Hub	HUB-101	-	
Joint Box	TL-CAT-012	000-167-140-10	For LAN cable extension
Connector Boot	OP19-7	001-028-090	
Operator’s Manual	OME-4440	000-167-802	
NMEA 2000 Interface Unit	IF-NMEA2K1	-	

1. MOUNTING

1.1 Mounting Considerations

MFD8

MFD12

When selecting a mounting location for the MFD8/12, keep the following in mind:

- The temperature and humidity at the mounting location should be moderate and stable.
- Locate the unit away from exhaust pipes and ventilators.
- The mounting location should be well ventilated.
- Mount the unit where shock and vibration are minimal.
- Keep the unit away from electromagnetic field generating equipment such as motors and generators.
- For maintenance and checking purposes, leave sufficient space at the sides and rear of the unit and leave slack in cables. Minimum recommended space is shown the outline drawing for the display units.
- Do not mount the MFD8/12 on the overhead.
- A magnetic compass will be affected if the display unit is placed too close to it. Observe the compass safe distances shown in the SAFETY INSTRUCTIONS to prevent disturbance to the magnetic compass.
- **For the flush mount**, make sure the mounting location is flat.

The MFD8/12 can be flush mounted in a console or panel, or mounted on a desktop.

1.2 Flush mounting

1. Prepare a cutout in the mounting location using the template sheet (supplied) for the MFD8 or 12.
2. Remove the front panel from the MFD by unfastening the catches at the rear of the panel, in the order as shown in the figure below.
   Note: Catches are tight to unfasten. Take care not to break the panel.
3. Attach the mounting sponge to the display unit.
4. Fix the display unit by using four self-tapping screws (supplied).
5. Attach the front panel to the display unit.

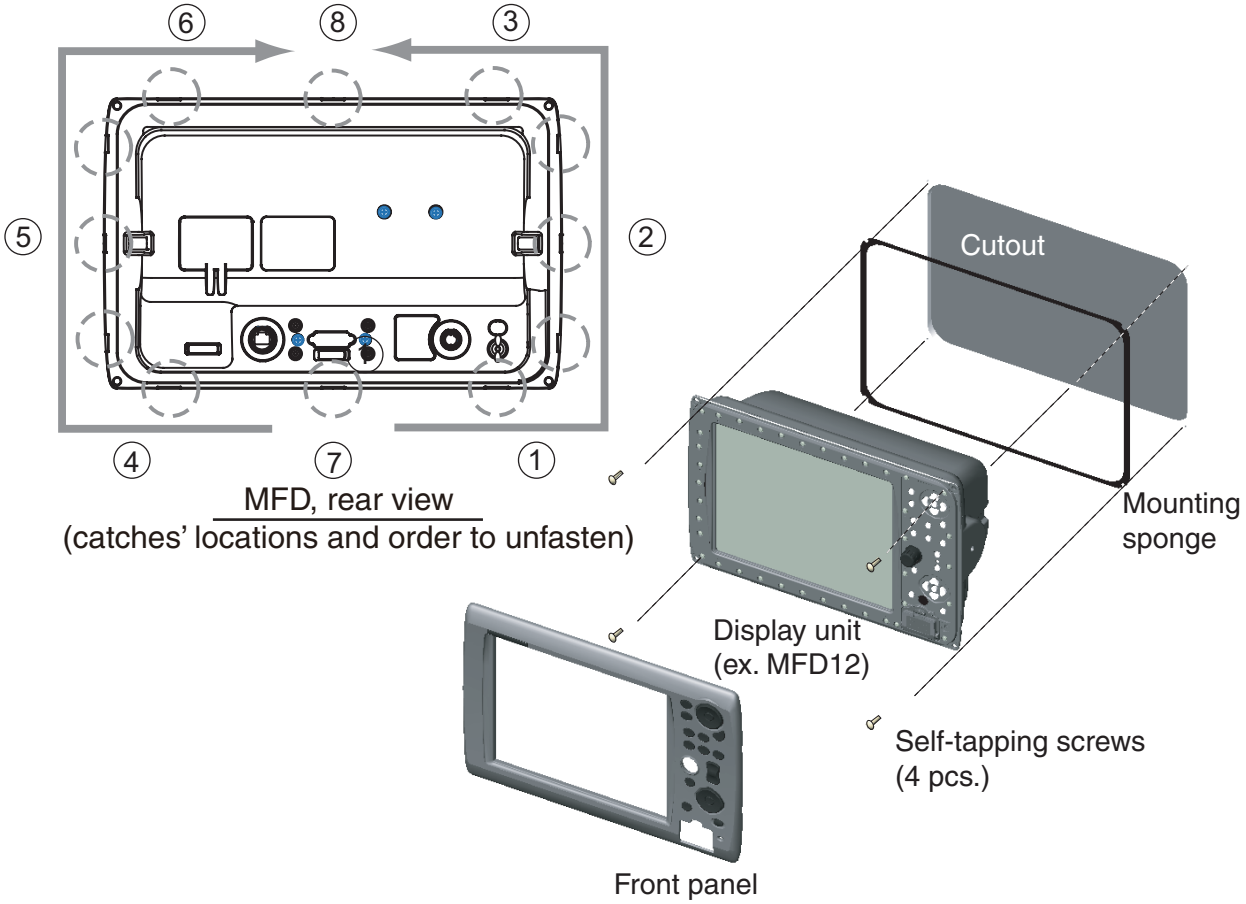

How to detach the front cover from the mounting place.

To detach the front panel after mounting the unit, use the remover (supplied) as below. Note that the front cover may be damaged if the following is not done.

1. Set the remover to a notch on the lower side of the unit.

2. Pull the remover to raise the panel slightly. Do this for all notches on the lower side of the unit.

3. Insert the remover to the space at the both sides of the unit, and pull the remover to raise the panel slightly.

4. Use your hands to detach the front panel at lower side of it.

1.3 Desktop Mounting

Follow the procedure below to mount the MFD8 or 12 on a desktop.

1. For MFD12, attach a liner to each side of the display unit.
2. Fix the hanger by using self-tapping screws (supplied).
3. Screw knob bolts into the display unit, set it to the hanger, and tighten the knob bolts.

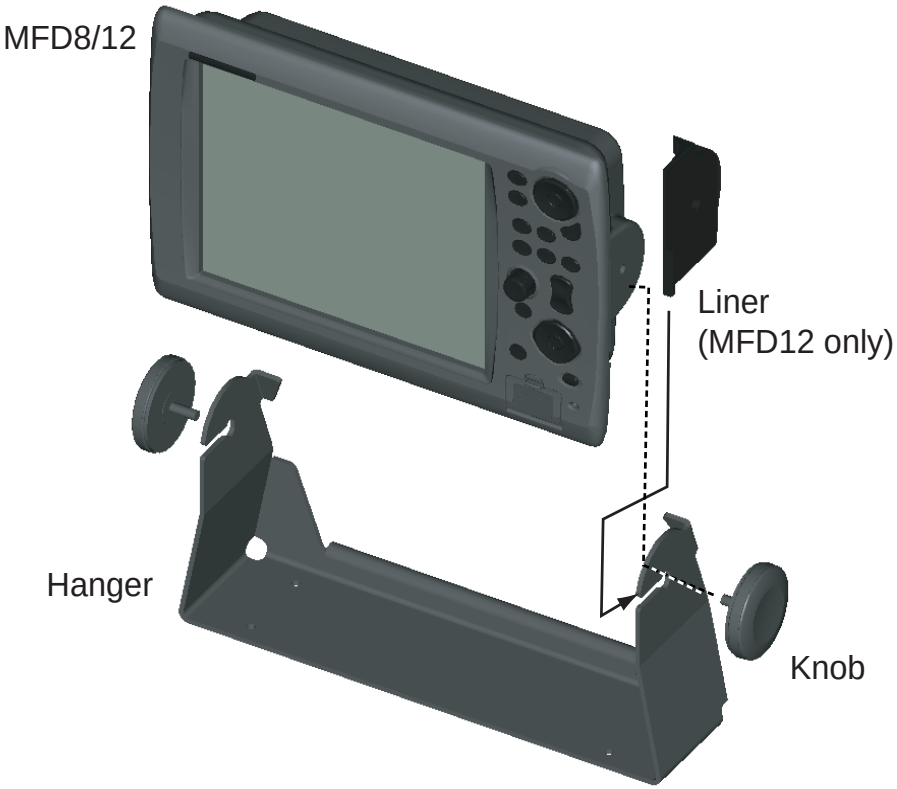

.

2. WIRING

All wirings are terminated at the rear of the equipment. DO NOT turn on the power until completing all the wiring. For detailed information about NMEA 2000 wiring, see “Furuno CAN bus Network Design Guide” (TIE-00170) on Tech-Net.

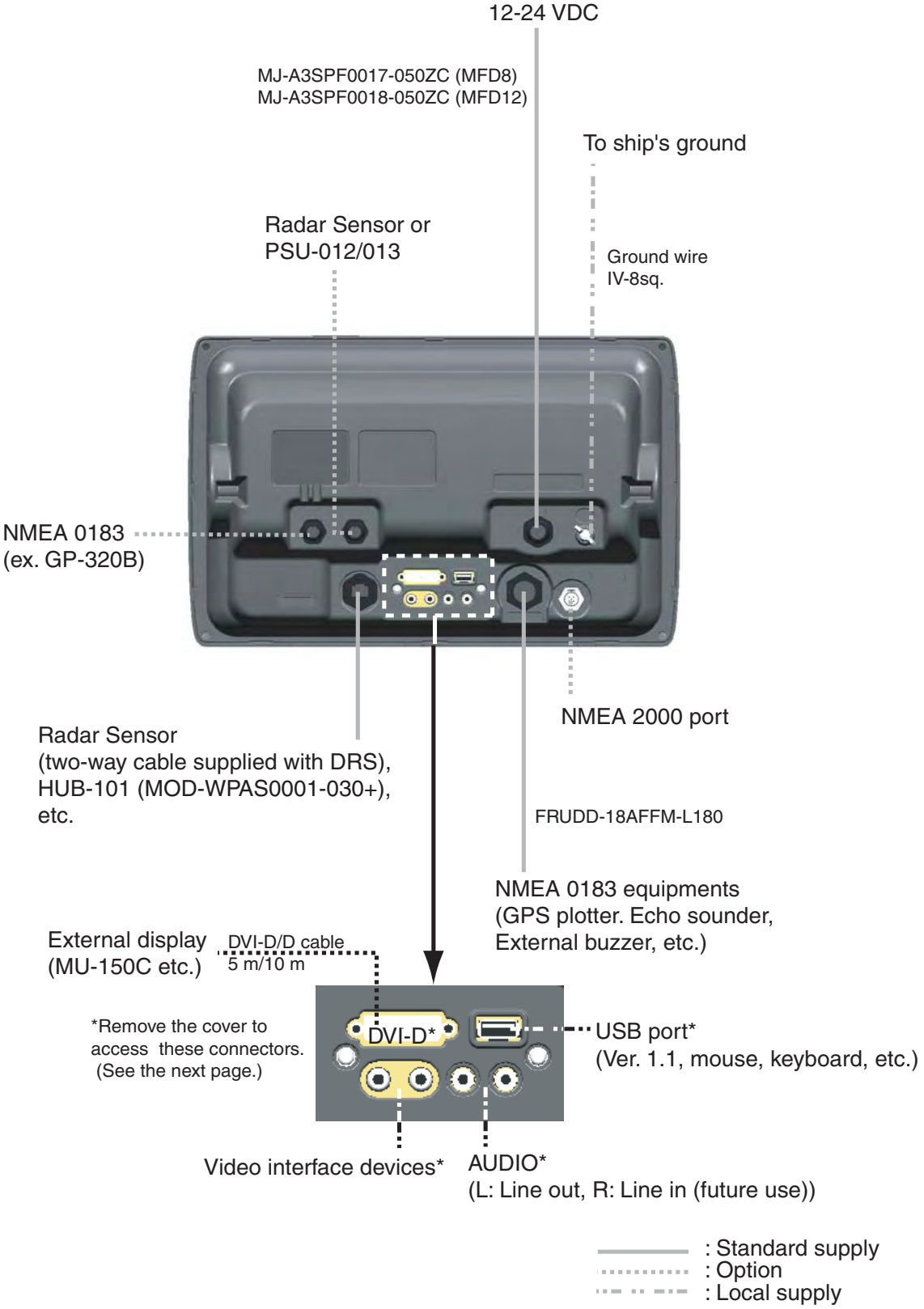

Using DATA2 port (NMEA0183)

To connect multiple NMEA0183 equipments, use the cable assy FRUDD-18AFFM-L180 supplied. This cable has an 18P connector. Solder the applicable wires of the FRUDD-18AFFM-L180 and the wires from sensors. The wire arrangement is shown below.

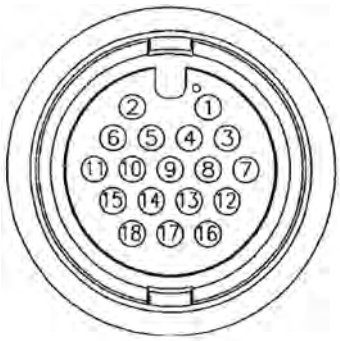

Pin No.	Color	Function	Remark (port No.)
18	Light green	NET-C IN (0V)	NMEA 2000 Power
17	Pink	NET-S IN (+15V IN)	
16	Purple	Shield	
15	White	BUZZER or EVENT IN	External buzzer or event switch
14	Gray	SPEED-ALARM C	Speed alarm contact
13	Yellow	SPEED-ALARM H	
12	Black/White	+12V	External buzzer power
11	Black	GND	
10	Blue/White	RD3-C	Port 3
9	Blue	RD3-H	
8	Green/White	TD3-B	
7	Green	TD3-A	
6	Orange/White	GND	
5	Orange	GND	
4	Brown/White	RD2-C	Port 2
3	Brown	RD2-H	
2	Red/White	TD2-B	
1	Red	TD2-A	

Video interface devices (analog type)

Maximum two camera/video devices can be connected. For this connection, the following cable is necessary (local supply).

- BNC connector
- 3C2V (Japan Industrial Standard (JIS), or the equivalent) coaxial cable (impedance 75Ω)

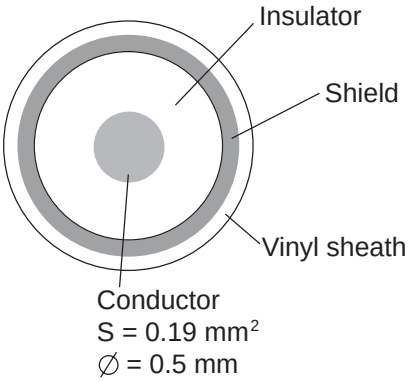

Video interface devices (digital type)

The NavNet 3D can display digital pictures from IP cameras (AXIS model 212 or 207 only) via LAN. IP addresses are allocated 172.31.200.003 through 006. For details, see the Operator's Manual for model 212 and 207.

How to connect cables to DVI-D, VIDEO, AUDIO or USB ports

The above-mentioned ports are behind the connector cover on the rear panel. Access to the ports and connect cables as shown in the procedure below. There are two methods, i.e., for waterproofing or non-waterproofing.

For waterproofing

This method requires the optional connector boot (Type: OP19-7, Code No.: 001-028-090).

Contents of OP19-7

Name	Type	Code No.	Qty
Boot cover	19-028-3141	100-342-642-10	1
Fixing metal	19-028-3142	100-342-650-10	1
Rubber stopper	19-028-3143	100-342-660-10	1
Cable tie	CV-150B	000-167-183-10	1
Binding screw	M3x10	000-162-662-10	4

1. Unfasten four binding screws to remove the connector cover at the rear of the display unit. Discard binding screws.

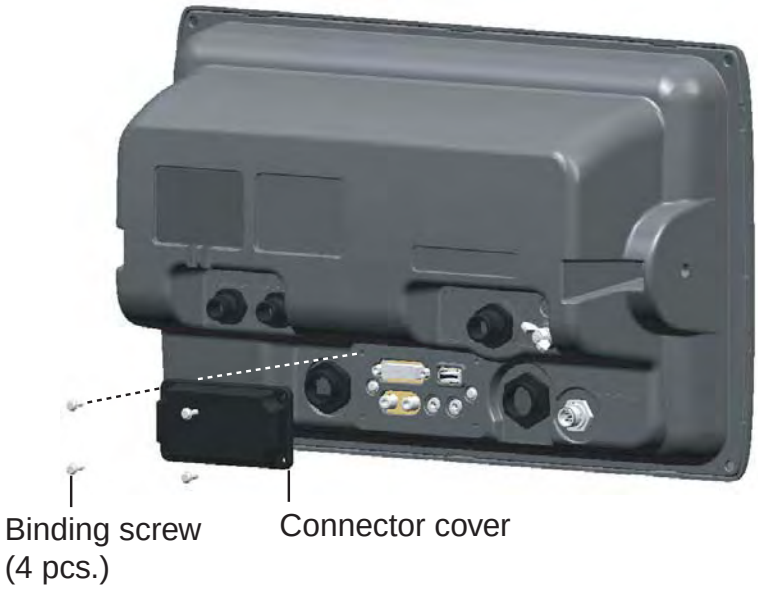

2. Pass DVI-D, VIDEO, AUDIO and/or USB cables through the fixing metal (supplied).

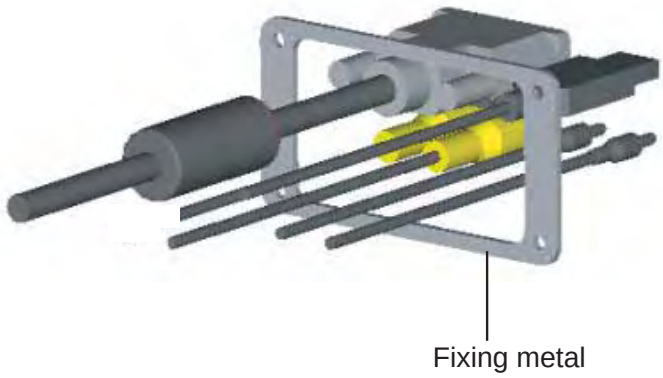

3. Attach each connector to the appropriate location at rear of the display unit.
4. Pass cables through the slit on the boot cover.
5. Set a rubber stopper to each cable. The largest hole is for the DVI-D cable.

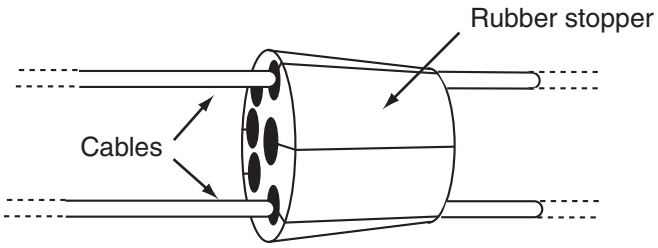

6. Use four binding screws (M3x10, supplied) to fasten the fixing metal and boot cover to the display unit.

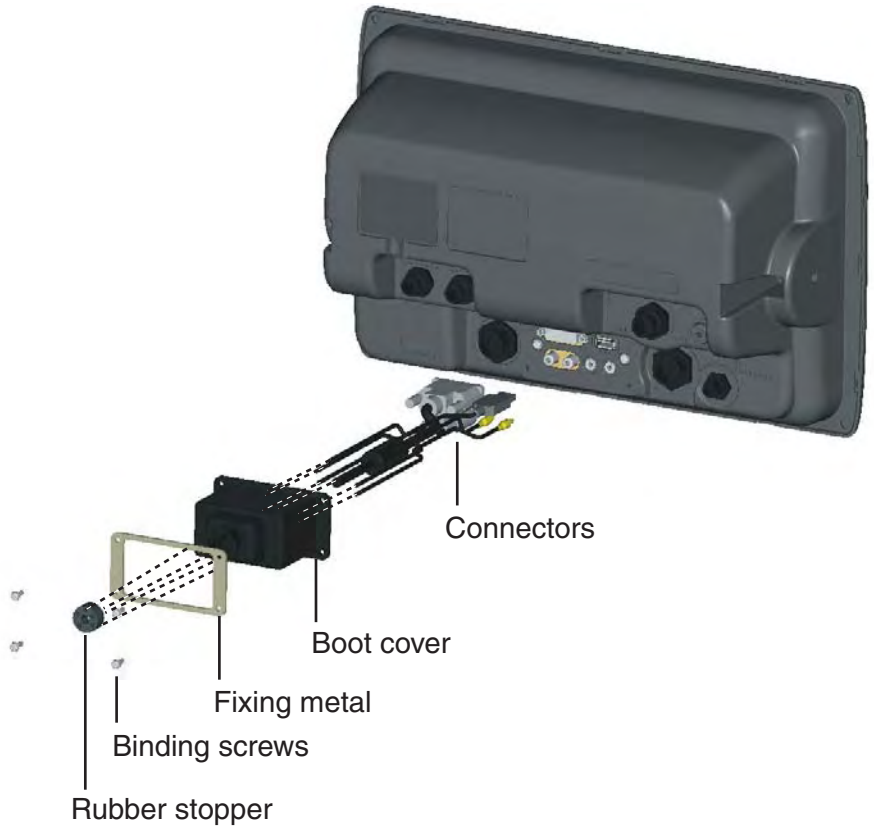

7. Slide the rubber stopper into the hole of the rubber boot, and fasten the cable tie to hold the rubber boot and stopper.

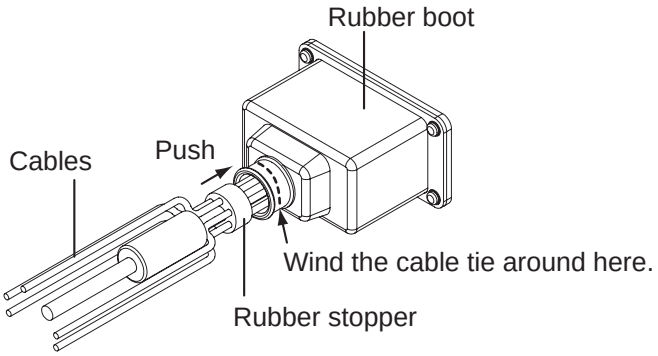

For non-waterproofing

When you do not need the waterproofing, use the cable fixing metal (supplied as the installation materials).

1. Unfasten four binding screws to detach the connector cover at the rear of the display unit. Discard binding screws.

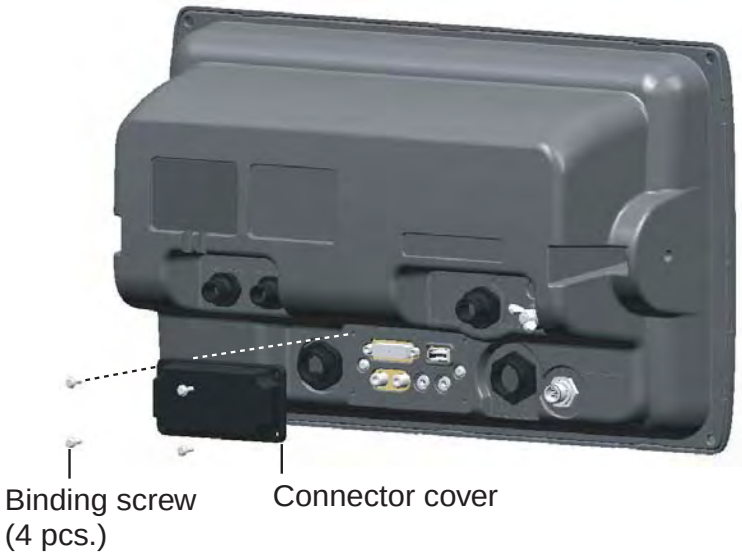

2. Attach the cable fixing plate by using the binding screw (M3x10, supplied as the installation materials).

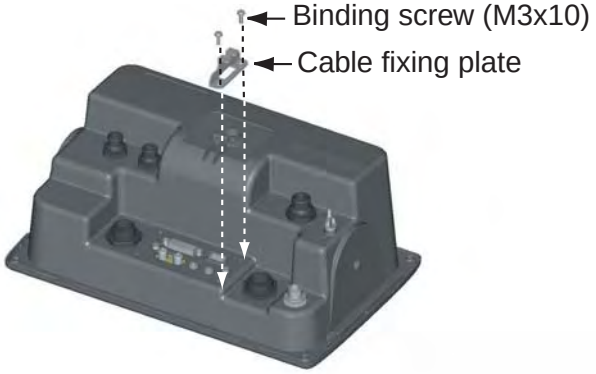

3. Attach each connector to the appropriate location at rear of the display unit.
4. Wind the cable tie (supplied as the installation materials) to fix the cables to the cable fixing plate.

3. SETTING UP THE EQUIPMENT

This chapter shows you how to set up your system according to the equipment you have connected. To do this more easily the Installation Wizard is provided. It has all the items necessary for setting up your system.

The Installation Wizard has four tabs, and each tab has some dialog boxes. You can construct your network system by setting these items in Wizard series.

Note: Do not transmit the radar until youhave set up the radar sensor (on page 23).

Own tab

Set the NMEA 0183/2000 and Analog video devices connected to your MFD.

Global tab

Set data on the network. These data can be shared with MFDs on the network.

Sounder tab

This tab appears when a network sounder (DFF, ETR series) or FCV-1150 is connected. Set the items for frequencies and “TD-ID” transducer of Airmar as appropriate.

Radar tab

This tab appears when a radar sensor (DRS series) or FAR-2xx7 series (Program Version No.: 02.50 or before, Type-C only) is connected. Set the antenna position and adjust the heading and main bang.

Used key on the Installation Wizard

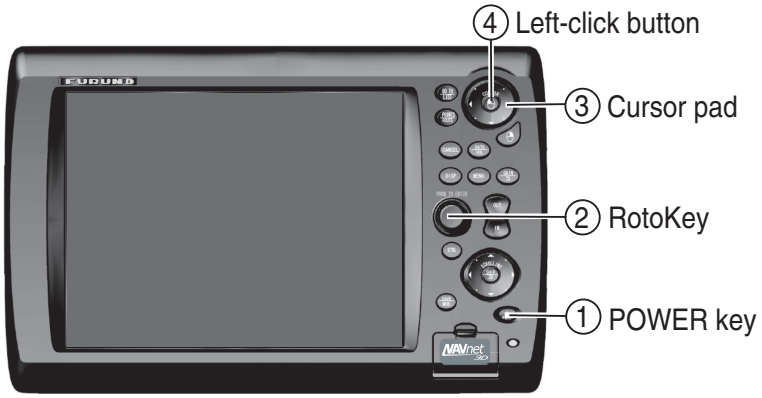

A commercial USB mouse or keyboard can be used.

3.1 Setup for Single MFD in the Network

When you have an MFD in the network, do the following procedures.

Language, DHCP server setting

1. Press the **POWER** key on the control unit to power the system. In a few minutes, the Installation Wizard starts. After the system has confirmed sensors, the language selection screen appears. The default language is English. If you don't need to change the language, click the [Next] button. If necessary, change language: choose the Select Language pull-down menu, and push the left-click button. Note that the language of the Installation Wizard is English regardless of language setting. And press the [Next] key.

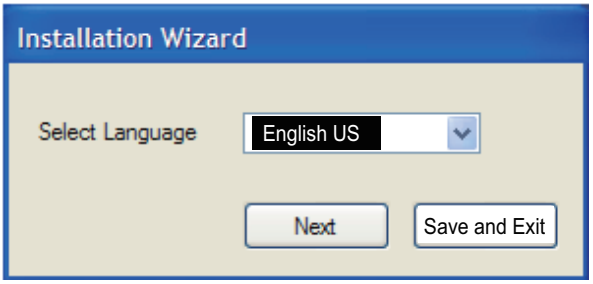

The system counts the number of sounders, radars and other sensors you have connected and displays the results. Allow the system to count the number of sensors, which takes about 30 seconds.

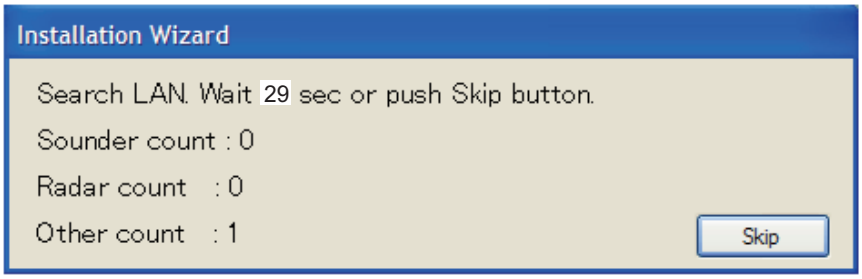

The following menu appears.

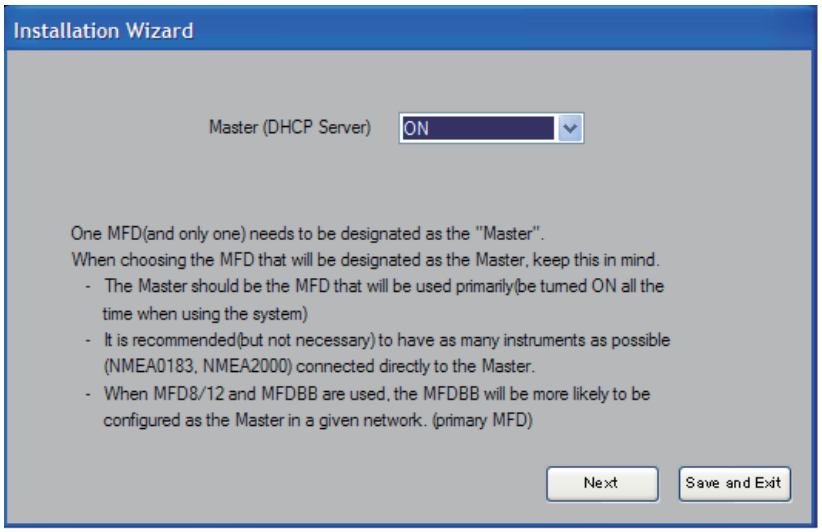

2. Confirm that the Master (DHCP Server) pull-down menu shows ON, and press [Save and Exit] button to turn the power off.
3. Press the **POWER** key to turn on the equipment again.
   After the confirming sensors. the Master (DHCP Server) setting screen appears again.
4. Press the [Next] button to show the Own-NMEA2000 tab.

Own-NMEA 2000 tab

Check the PGNs (Parameter Group Number, NMEA 2000 messages) to output from the NMEA 2000 port, and click the [Next] button.

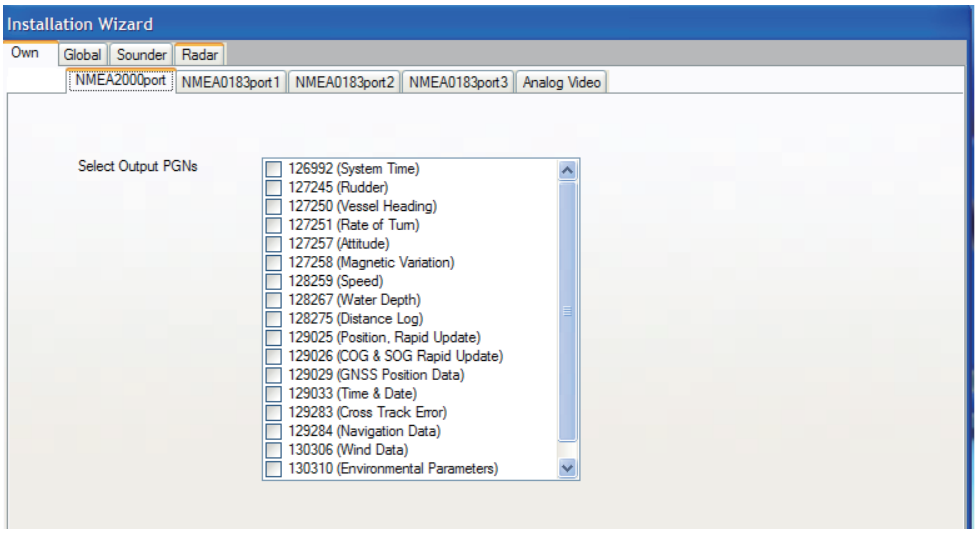

PGN No. and Messages

PGN No.	Message mean
126992	System Time
127245	Rudder
127250	Vessel Heading
127251	Rate of Turn
127257	Attitude
127258	Magnetic Variation
127259	Speed, Water referenced
128267	Water Depth
129025	Position, Rapid Update
129026	COG & SOG, Rapid Update
129029	GNSS Position Date
129033	Time & Date
129283	XTE
129284	Navigation Data
130306	Wind Data
130310	Environmental Parameters
130311	
129540	GNSS Sats in view
130577	Direction Data

Own-NMEA 0183 port 1 through 3 tabs

Set up the NMEA0183 data ports.

NMEA0183 port 1: DATA1 connector (7 pins)
NMEA0183 port 2: DATA2 connector (pin #: 1 to 4)
NMEA0183 port 3: DATA2 connector (pin #: 7 to 11)

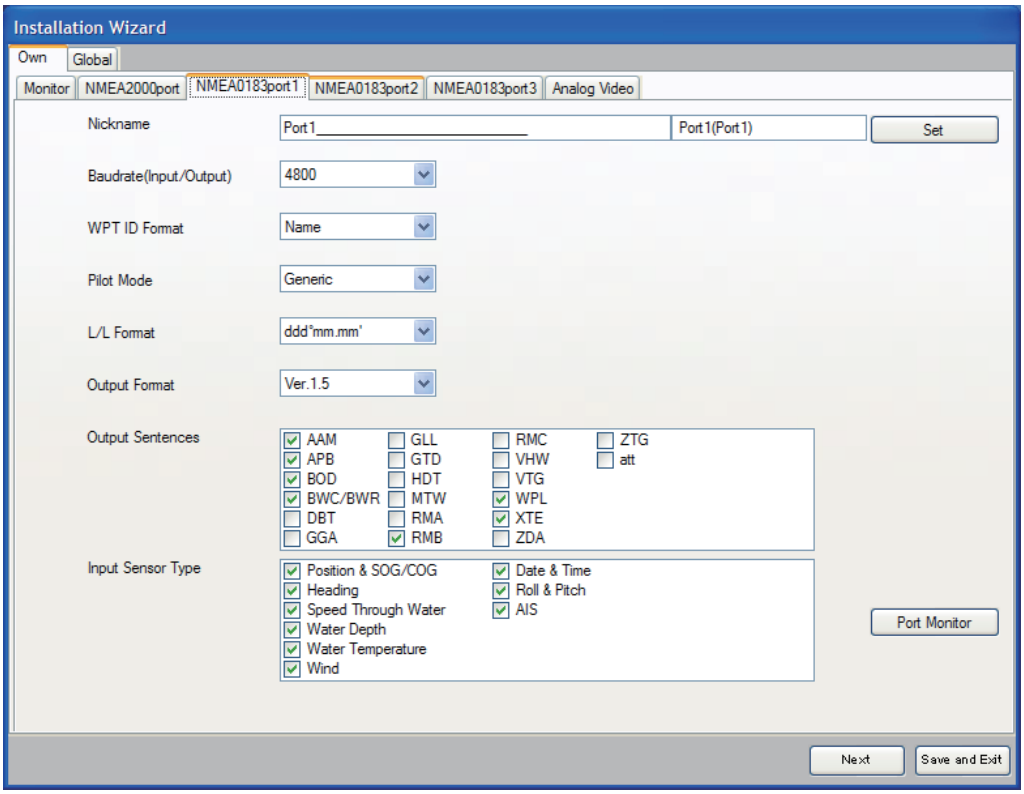

All NMEA0183 ports on your MFD are assigned respective nicknames. If you don't like the preassigned nickname, you can change it at Nickname field. Use the cursor pad to select location. Rotate the **RotoKey** to select character and push it to confirm selection. Repeat this operation to complete the nicknames

5. Set baud rate at the Baudrate pull-down menu, 4800 or 38400.
6. Choose how to indicate waypoints, Name or ID No., at the WPT ID Format pull-down menu.
7. Choose the pilot mode, Generic or Zeus, at the Pilot Mode pull-down menu.
   - Generic: NAVpilot-500 or other auto pilot
   - Zeus: Mercury Zeus electronic steering
     Note: When choosing Zeus at one of NMEA0183 ports (1 to 3), Generic is automatically set at the other ports.
8. At the L/L format dialog box, choose how many digits (seconds) to display after decimal point in latitude and longitude.
9. Choose the NMEA 0183 version to output, Ver 1.5, Ver 2.0 or Ver 3.0, at the Output format pull-down menu.

10.At the Output Sentences field, check the NMEA0183 sentences to output.

NMEA0183 Output sentences

Name	Meaning	Name	Meaning
AAM	Waypoint arrival alarm	RMA	Loran-C data
APB	Autopilot sentence	RMB	
BOD	Bearing origin to destination	RMC	GPS/Transit
BWC/BWR	Bearing and distance to waypoint	VHW	Speed/heading (through water)
DBT	Depth below transducer	VTG	Speed over ground, course (true)
GGA	GPS fix data	WPL	Waypoint location
GLL	Geographic position (L/L)	XTE	Cross-track error, measured
GTD	Geographical Position, Loran-C TDs	ZDA	Time and date
HDT	Heading true	ZTG	UTC and time to destination waypoint
MTW	Water temperature	att	Heading/Roll/Pitch

Note: If the Pilot mode is chosen to Zeus (at step 7), check APB, RMC, and XTE.

11.At the Sensor Type field, check sensor data that is input to the MFD.
Example 1: Check Position & SOG/COG for GPS receiver connection.
Example 2: Check Heading for heading sensor connection.
When using the DATA2 and/or DATA3 ports on the MFD, set the NMEA0183 port 2 and/or port 3.

12.If the GPS receiver GP-320B is connected, click the [Advanced Setup] button to show the setting menu for GP-320B. Set all items referring to the table shown below.

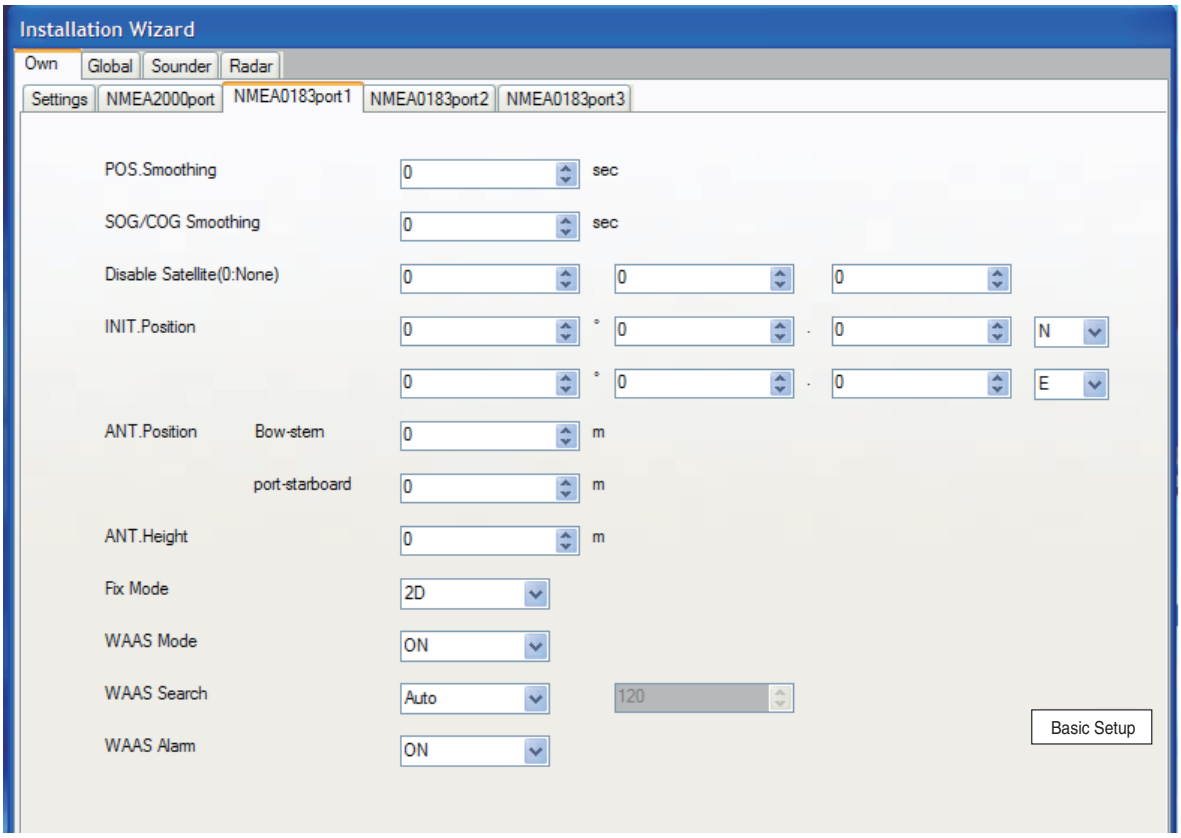

Menu item	Description
POS. Smoothing	When the receiving condition is unfavorable, the GPS fix may change, even if the vessel is dead in water. This change can be reduced by smoothing the raw GPS fixes. A setting between 000 to 999 is available. The higher setting the more smoothed the raw data, however too high a setting slows response time to change in latitude and longitude. This is especially noticeable at high ship's speeds. Increase the setting if the GPS fix changes.
SOG/COG Smoothing	During position fixing, ship's velocity (speed and course) is directly measured by receiving GPS satellite signals. The raw velocity data may change randomly depending on receiving conditions and other factors. You can reduce this random variation by increasing the smoothing. Like with latitude and longitude smoothing, the higher the speed and course smoothing the more smoothed the raw data. If the setting is too high, however, the response to speed and course change slows. For no smoothing, enter all zeroes.
Disable Satellite	Every GPS satellite is broadcasting abnormal satellite number(s) in its Almanac, which contains general orbital data about all GPS satellites, including those which are malfunctioning. Using this information, the GPS receiver automatically eliminates any malfunctioning satellite from the GPS satellite schedule. However, the Almanac sometimes may not contain this information. If you hear about a malfunctioning satellite from another source, you can disable it manually. Enter satellite number (max. 3 satellites) in two digits.
INIT. Position	Set initial latitude/longitude position for cold start.
ANT. Position	Enter the GPS antenna positioning bow-stern and port-starboard position. 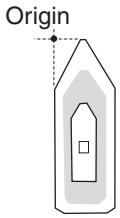
ANT. Height	Enter the height of the GPS antenna unit above sea surface.
Rx Mode	Choose position fixing method: 2D (three satellites in view), 2D/3D (three or four satellites in view whichever is greater).
WAAS Mode	Select ON to use the WAAS mode.
WAAS Search	WAAS satellite can be searched automatically or manually. For manual search, enter appropriate WAAS satellite number.
WAAS Alarm	When the WAAS signal is lost, the audible alarm sounds one of two ways. **On:** Alarm sounds continuously until the WAAS positioning mode is available again or the alarm is acknowledged (by key operation). **Off:** Alarm sounds three times.

13.Click the Next button.

Global-Analog Video tab

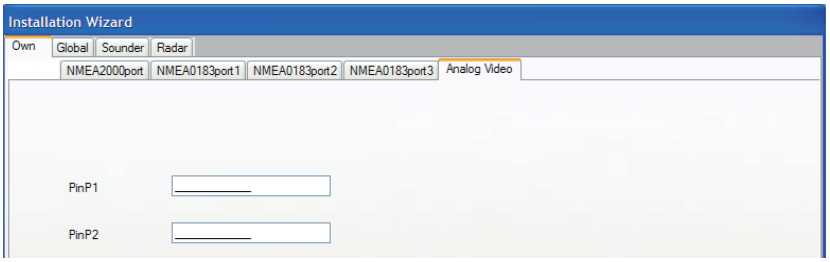

14. All analog video equipment connected to the MFD are assigned respective nicknames (“PinP1 to 2”).
    If you don’t like the preassigned nickname, you can change it here. Use the cursor pad to select location. Rotate the **RotoKey** to select character and push it to confirm selection. Repeat this operation to complete the nicknames.
15. Press the [Next] button.

Global-Boat tab

Enter your boat’s dimensions, length/width unit and engine’s specifications.

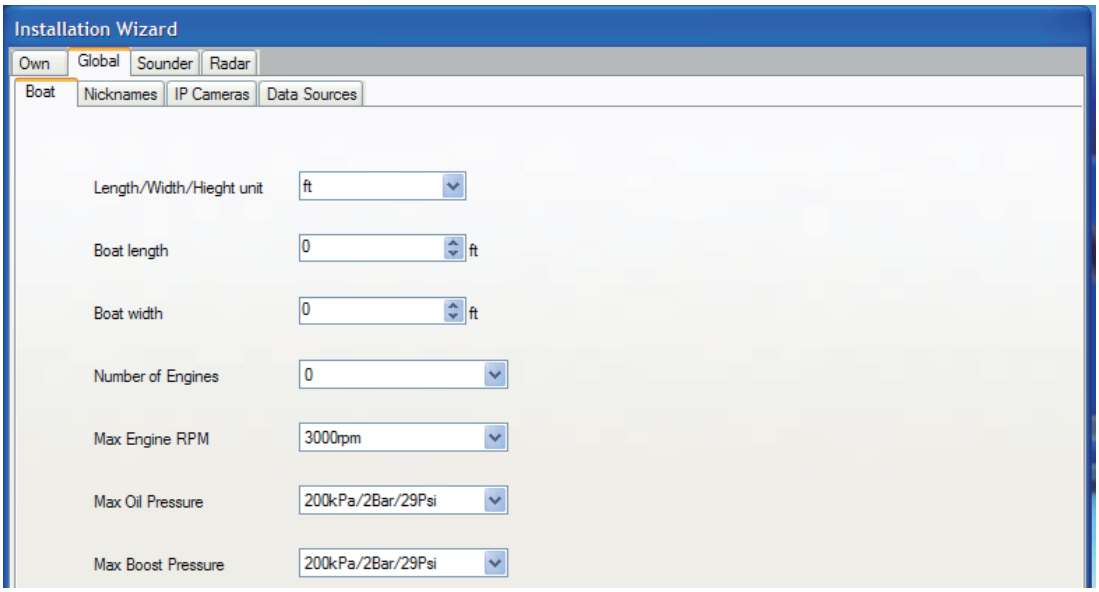

16. Choose the desired unit of length and width for the boat (ft, m) at the Length/Width/Height unit pull-down menu.
17. Set the length of boat at the Boat length pull-down menu.
18. Set the width of boat at the Boat Width pull-down menu.
19. Choose the number of engines on your boat (1, 2 or 3) at the Number of Engine pull-down menu.
20. Choose the max. scale of the tachometer (3000 rpm, 4000 rpm or 8000 rpm) at the Engine Revolution pull-down menu.
21. Choose the max. scale of the oil pressure meter (200kPa/2Bar/29Psi, 500kPa/5bar/72.5Psi or 1000kPa/10bar/145Psi) at the Max. Oil Pressure pull-down menu.
22. Choose the max. scale of the boost meter (200kPa/2Bar/29Psi, 500kPa/5bar/72.5Psi or 1000kPa/10bar/145Psi) at the Max. Boost Pressure pull-down menu.
23. Click the [Next] button.

Global-Nickname tab

All equipment in the NavNet 3D system are assigned respective nicknames. If you don't like the preassigned nickname, you can change it here. Use the cursor pad to select location. Rotate the **RotoKey** to select character and push it to confirm selection. Repeat this operation to complete the nicknames.

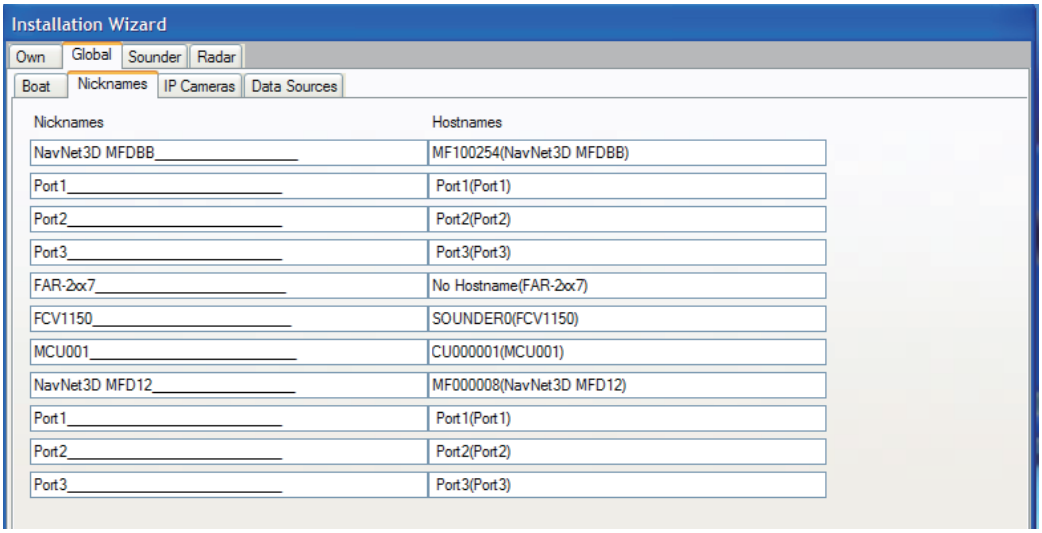

24.Click the [Next] button.

Global-IP Camera tab

The IP cameras connected to the network are assigned a name ("IPcamera1 to 4"). If you don't like the preassigned name, you can change it here. Change the name using the cursor pad and **RotoKey** as is the Global-Nickname tab.

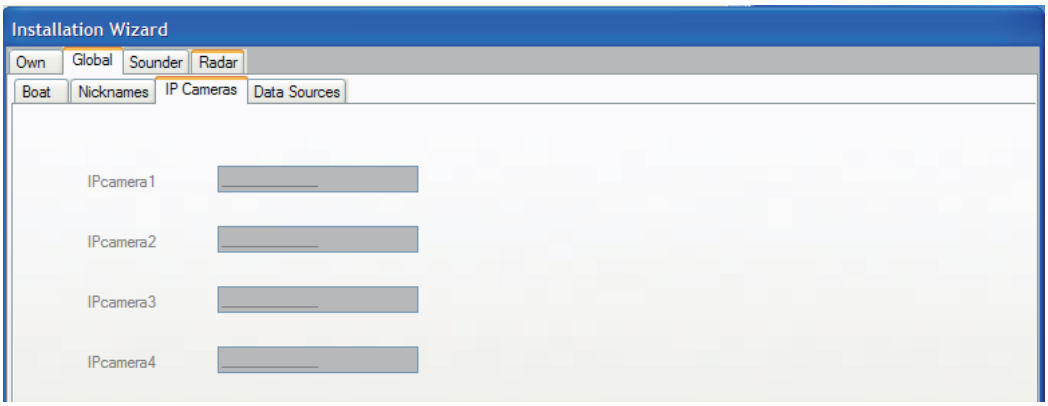

25.Click the [Next] button.

Global-Data Source tab

The Data Source dialog box shows the sources of various nav data. In case of multiple sensors for a nav data item, for example, several position-fixing equipment, choose the sensor to use, with the pull-down menu.

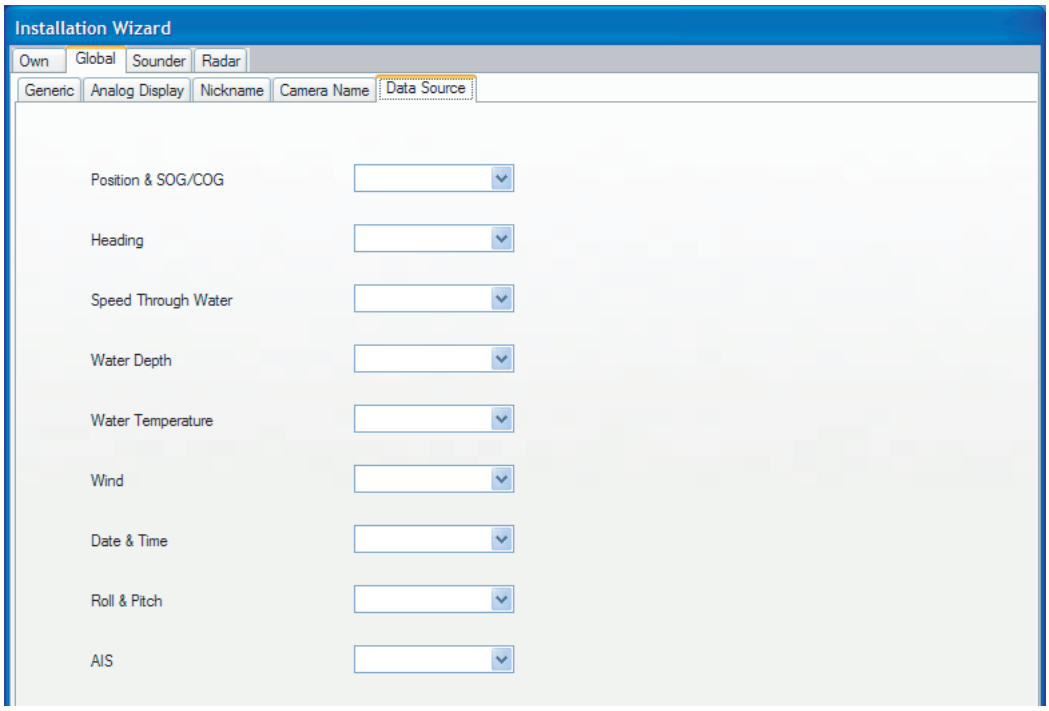

Item	Description	Setting
Position & SOG/ COG	Choose the position-fixing sensor to use.	GP-320B, GP-310B, NMEA 2000 format GPS
Heading	Choose the heading sensor to use.	SC-30, PG-500, PG-1000, Other
Speed Through Water	Choose the speed (STW) sensor to use.	Smart sensor (NMEA 0183), Speed sensor (DFF), Smart sensor (NMEA 2000), Other (NMEA 0183)
Water Depth	Choose the depth sensor to use.	Smart sensor (NMEA 0183), Speed sensor (DFF), Smart sensor (NMEA 2000), Other (NMEA 0183)
Water Tempera-ture	Choose the temperature sensor to use.	Smart sensor (NMEA 0183), Speed sensor (DFF), Smart sensor (NMEA 2000), Other (NMEA0183)
Wind	Choose the wind sensor to use.	FI-303, FI-501/502, WS-200, Other
Date & Time	Choose the date and time source to use.	GP-320B, GP-310B, SC-30, NMEA 2000 format GPS, Other
Roll and Pitch	Choose the motion sensor to use.	SC-30, WS-200, Other
AIS	Choose the AIS equipment to use.	FA-150, FA-30, Other

26. Click the [Next] button.
    When the GP-330B or WS-200 is connected to the NMEA2000 network, go to the GPS Mode. Set the WAAS, referring to the step 29. If not, go to step 30.

27. The GPS Mode tub appears when the GP-330B or WS-200 is connected. Set the WAAS Mode and WAAS Search, and click the [Next] button. (See the list on page 21.)

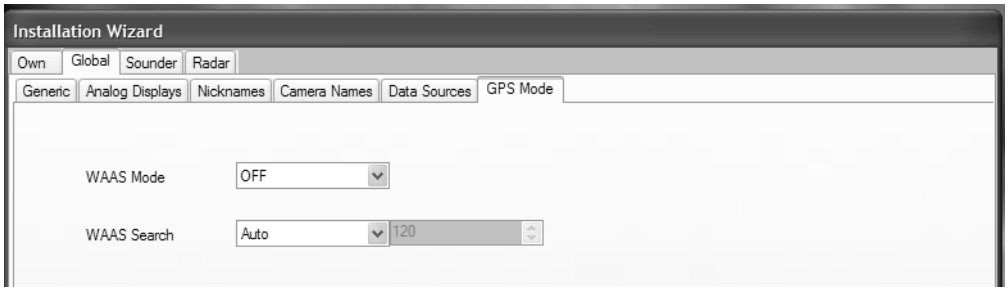

Sounder, Radar tabs

When your MFD is connected to a sensor(s), i.e., network sounder (DFF, ETR or FCV-1150) and/ or radar sensor (DRS or FAR-2xx7), a dialog box appears with the name of the sensor shown in a tab.

Sounder

28. Click the Sounder Source select dialog box, and choose the type of the network sounder.

(Setting for DFF series)

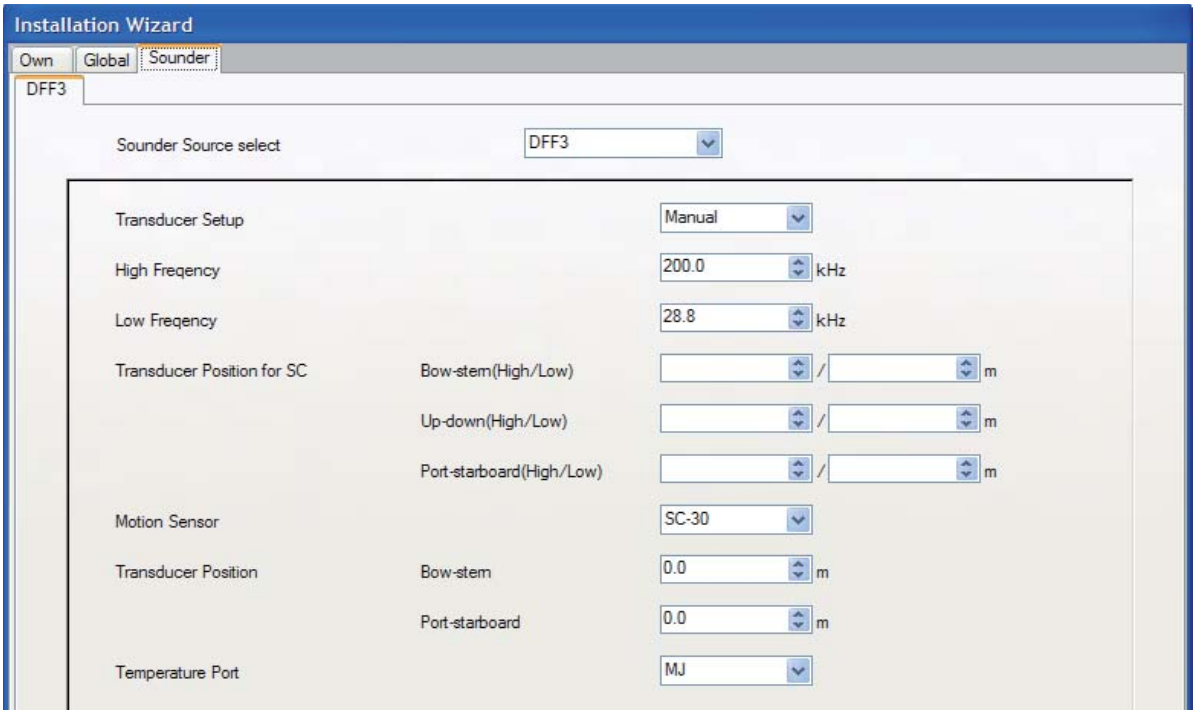

a) Click the Transducer Setup pull-down menu, and choose Model Number, TD-ID or Manual, according to the transducer connected.
   Model Number: Furuno's transducer
   TD-ID: Airmar's transducer w/TD-ID
   Manual: Transducers other than above
b) If you choose Model Number at step a), click the High Frequency and Low Frequency pull-down menus, and choose the applicable model type. For TD-ID and Manual, set the high and low frequencies.
c) For DFF1 or DFF1-UHD, click the Power pull-down menu, and choose output power of the transducer.
   DFF1: 1k (W) or 600W
   DFF1-UHD: 1k (W)

d) If the satellite compass SC-30 or SC-50/110 is connected, set the distance between antenna unit (or sensor) of the satellite compass and transducer (high and low if connected) at the Transducer Position for SC pull-down menus.
Bow-stern: Set the distance from antenna unit to the transducer in bow-stern direction. When the transducer is located on the fore side, set a positive value.
Up-down: Set the distance from the transducer to the antenna unit in the vertical direction.
Port-starboard: Set the distance from antenna unit to the transducer in port-starboard direction. When the transducer is located on the starboard side, set a positive value.

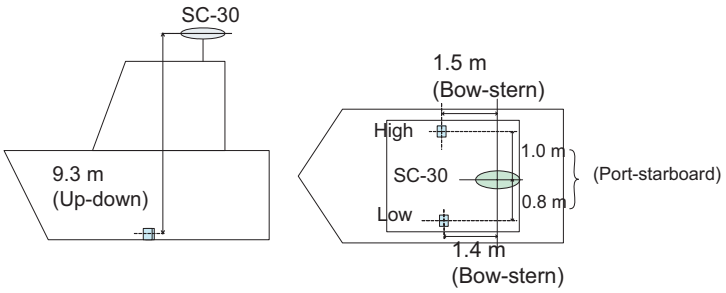

e) Click the Motion Sensor pull-down menu, and choose SC-30 or SC-50/110 if connected.
f) Set the transducer position at the Transducer Position pull-down menus.

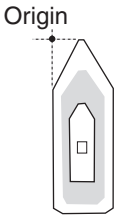

g) If the DFF3 is equipped with a water temperature sensor, click the Temperature Port pull-down menu, and choose the temperature source, MJ (NMEA0183 connector), High-freq(ency) or Low-freq(ency).
h) If a radar sensor is connected, click the Next button to continue.

Note: For DFF3, set the tap setting in the network sounder after setting up all the MFDs. For details, see the Operator's Manual for DFF3.

(Setting for ETR)

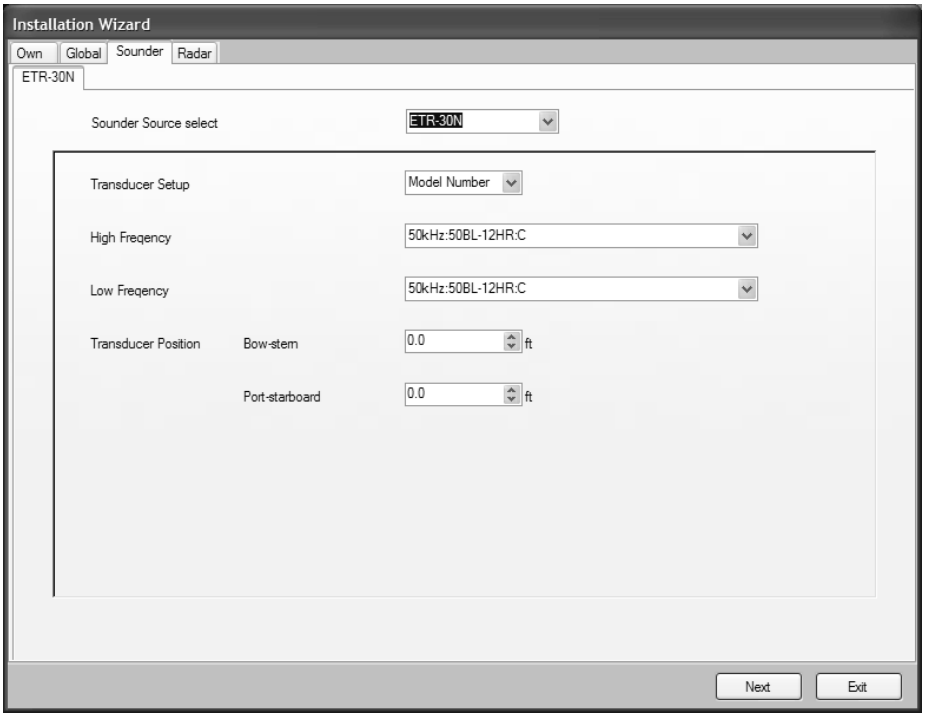

a) Click the Transducer Setup pull-down menu, and choose Model Number or Manual, according to the transducer connected.
Model Number: Furuno's transducer
Manual: Transducers other than Furuno

b) If you choose Model Number at step a), click the High Frequency and Low Frequency pull-down menus, and choose the applicable model type. For Manual, set the high and low frequencies with the respective pull-down menus.

c) Use the arrow buttons at Transducer Position to set transducer position.

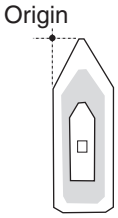

d) If a radar sensor is connected, click the Next button to continue.

(For FCV-1150)

Do the step c) shown above.

Radar

Set the Radar dialog box according to the radar connected.

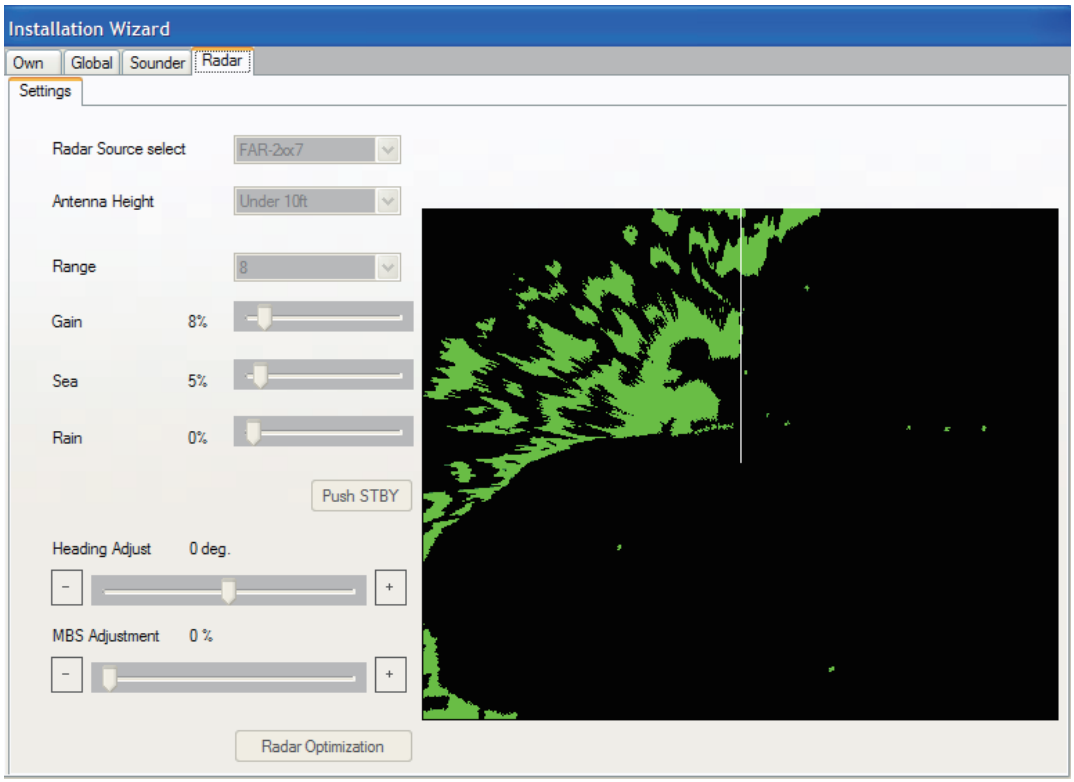

29. Click the Radar Source select pull-down menu, and choose the radar type connected, DRS RADOME, DRS OPEN or FAR-2xx7.
    For “FAR-2xx7”, steps 30 through 31 shown below cannot be done. Set these items on the FAR-2xx7 radar.
30. Click the Antenna Height pull-down menu, and choose the height of the antenna above the waterline, among Under 10ft, 10ft-30ft or Over 30ft.
31. Do the heading adjustment as follows.
    You have mounted the radar sensor facing straight ahead in the direction of the bow. Therefore, a small but conspicuous target dead ahead visually should appear on the heading line (zero degrees).
    In practice, you will probably observe some small errors on the display because of the difficulty in achieving accurate initial positioning of the radar sensor. The following adjustment will compensate for this error.
    a) Set ship’s heading toward a suitable target (for example, ship or buoy).
    b) Click the Range pull-down menu, and choose a range between 0.125 and 0.25 nautical miles.
    c) Click the [Push TX] button to transmit.
       The radar picture appears on the right-half of the Radar dialog box.
    d) If necessary, adjust the gain, sea clutter and rain clutter using slider bars.
       Place the cursor on the slider bar, and press the cursor pad while pressing the left-click button.
    e) Click the [-] [+] buttons for Heading Adjust to bisect the target with the heading line.
    f) As a final test, move the boat towards a small buoy and confirm that the buoy shows up dead ahead on the radar when it is visually dead ahead.

32. If main bang appears at the screen center, click the [-] [+] buttons for MBS Adjustment so that the main bang disappears while watching the radar echo at the right-hand side of the display.
33. Click the [Radar Operation] button to adjust the tuning and video automatically.
34. Click the [Save and Exit] button to finish the Installation Wizard.

Setting the zero line area (For DFF series only)

Turn the zero line (transmission line) on or off. When turned off, the line is not shown, which allows you to better watch fish echoes near the surface. The width of the line changes with transducer used and installation characteristics. If the width of the line is 1.0 m or more, set the line area as below.

1. At the normal operation mode, press the **MENU** key while pressing the **CNTRL** key down to open the Serviceman menu.
2. Rotate the **Rotokey** to choose the Fish Finder tab, and push the **Rotokey**.

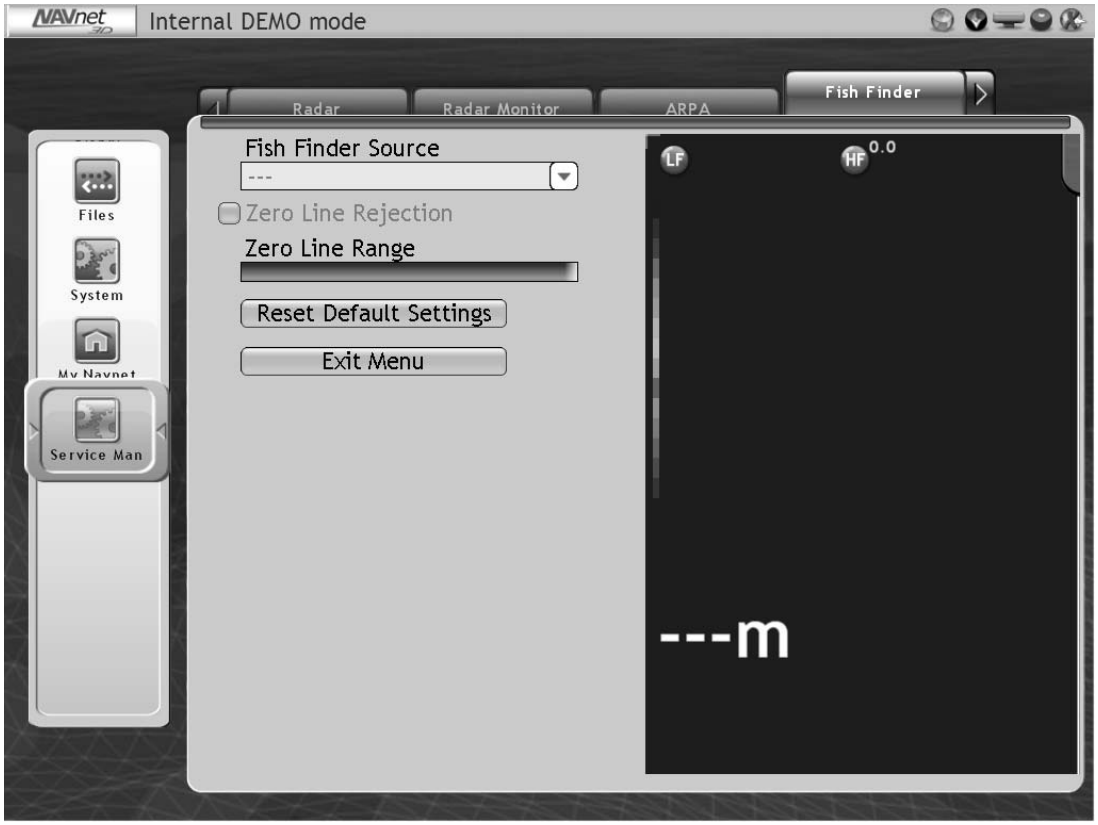

3. Rotate the **Rotokey** to choose Zero Line Rejection, and push the **Rotokey** to turn the zero line on.
   The icon turns green color, and the cursor moves to Zero Line Range.
4. For DFF3, rotate the **Rotokey** to set the effective area (setting area: 1.0 to 2.0 m) and push the **Rotokey**. For DFF1 or DFF1-UHD, turn the zero line on or off.
5. Press the **MENU** key to close the menu.

3.2 Setup for Multiple MFDs in the Network

When you have multiple MFDs in the network, designate one as the DHCP (dynamic Host Configuration Protocol) server.

1. Confirm that applicable DIP switches connected MFDs on the internal hub to ON.
2. Turn on the MFD chosen to act as DHCP server.
3. Select Language and click the [Next] button.

The system counts the number of sounders, radars and other sensors you have connected and displays the results. Allow the system to count the number of sensors, which takes about 30 seconds.

4. Set Master (DHCP Server) setting to ON.
5. Click the [Save and Exit] button. (The unit turns off automatically after one minute.)
6. Turn on the server MFD.
7. Turn on all other MFDs in the network.
8. Carry out the Installation Wizard settings on the master MFD, referring to section 3.1.
9. Set up the next MFD as follows:
   a) Press the **POWER** key to turn the power on.
   b) Choose language and click the [Next] button.
   c) Choose OFF from the Master (DHCP Server) setting box.
   d) Set up the MFD using the Installation Wizard, and wait for the other MFD's setting are finished.
10. Set up other MFDs.
11. After setting up all MFDs, click the [Save and Exit] button on the master MFD and the unit goes off automatically.
12. Click the [Save and Exit] button on other MFDs in the order in which they were set up.
    The master MFD starts the normal application, and client MFDs go to the sleep mode, which is shows the no display though the power is turned on. The power LED lights orange.
13. Press the **POWER** key on the master MFD for three seconds to turn off the master MFD. Confirm that other MFDs also are turned off.
14. Press the **POWER** key on master MFD. Confirm that the master MFD starts the normal application, and slave MFDs go to the sleep mode.
    To escape from the sleep mode to the normal mode, press the **POWER** key.

PACKING LIST MFD8-J/E

NAME	OUTLINE	DESCRIPTION/CODE No.	Q'TY
ユニット UNIT			
ﾏﾙﾁﾌｧﾝｸｼｮﾝﾃﾞｨｽﾌﾟﾚｲ MULTI FUNCTION DISPLAY	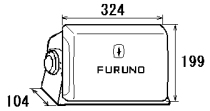	MFD8-J/E 000-011-776-00 **	1
予備品 SPARE PARTS			
予備品 SPARE PARTS		SP19-00701 001-028-020-00	1
付属品 ACCESSORIES			
付属品 ACCESSORIES		FP19-01101 001-023-060-00	1
工事材料 INSTALLATION MATERIALS		**CP19-00900**	
ｹｰﾌﾞﾙ組品 CABLE ASSEMBLY		FRUDD-18AFFM-L180 000-164-608-10	1
ｹｰﾌﾞﾙ組品LAN LAN CABLE ASSEMBLY	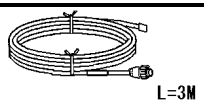	MOD-WPAS0001-030+ 000-164-609-10	1
ｹｰﾌﾞﾙ組品MJ CABLE ASSY.		MJ-A3SPF0017-050ZC 000-157-995-10	1
工事材料 INSTALLATION MATERIALS		CP19-00901 001-028-050-00	1

1.ｺｰﾄﾞ番号末尾の[**]は、選択品の代表ｺｰﾄﾞを表します。
CODE NUMBER ENDING WITH "**" INDICATES THE CODE NUMBER OF REPRESENTATIVE MATERIAL.

2.付属品及び一部の図書は、書類ｹｰｽに収められています。
ACCESSORIES AND A PART OF THE DOCUMENTS IS PUT IN THE DOCUMENTS CASE.

(略図の寸法は、参考値です。DIMENSIONS IN DRAWING FOR REFERENCE ONLY.)

NAME	OUTLINE	DESCRIPTION/CODE No.	Q'TY
図書 DOCUMENT			
ﾋｭｰｽﾞ変更のお願い ﾜ/ｴｲ NOTIFICATION DOCUMENT	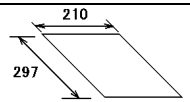	C42-00706-* 000-170-502-1*	1
ﾌﾗｯｼｭﾏｳﾝﾄ型紙 FLUSH MOUNTING TEMPLATE	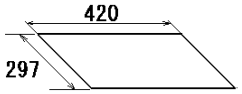	C42-00709-* ﾜ/ｴｲ 000-170-500-1*	1
取扱説明CD OPERATOR'S MANUAL CD	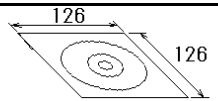	NAVNET3 O/M *CD-ROM* NAVNET3 O/M *CD-ROM* 000-170-477-1* 000-167-721-1*	1
取扱説明書 OPERATOR'S MANUAL	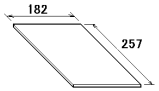	OM*-44441-* 000-170-504-1* **	1
書類ｹｰｽ DOCUMENTS CASE	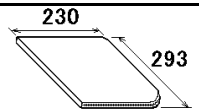	H293XW230XT18 H293XW230XT18 000-168-580-11 000-168-580-10	1
操作要領書(ﾀｹﾞﾝ) OPERATOR'S GUIDE	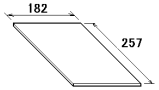	MLG-44440-* 000-170-497-1*	1
装備要領書 INSTALLATION MANUAL	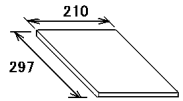	IM*-44440-* 000-170-505-1* **	1

型式/ｺｰﾄﾞ番号が2段の場合、下段より上段に代わる過渡期品であり、どちらかが入っています。 なお、品質は変わりません。

TWO TYPES AND CODES MAY BE LISTED FOR AN ITEM. THE LOWER PRODUCT MAY BE SHIPPED IN PLACE OF THE UPPER PRODUCT. QUALITY IS THE SAME.

A-1

C4444-Z01-H

PACKING LIST MFD12-J/E

NAME	OUTLINE	DESCRIPTION/CODE No.	Q'TY
ユニット UNIT			
ﾏﾙﾁﾌｧﾝｸｼｮﾝﾃﾞｨｽﾌﾟﾚｲ MULTI FUNCTION DISPLAY	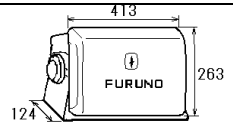	MFD12-J/E 000-011-778-00 **	1
予備品 SPARE PARTS			
予備品 SPARE PARTS		SP19-00801 001-028-030-00	1
付属品 ACCESSORIES			
付属品 ACCESSORIES		FP19-01101 001-023-060-00	1
工事材料 INSTALLATION MATERIALS		**CP19-01000**	
ｹｰﾌﾞﾙ組品 CABLE ASSEMBLY		FRUDD-18AFFM-L180 000-164-608-10	1
ｹｰﾌﾞﾙ組品LAN LAN CABLE ASSEMBLY	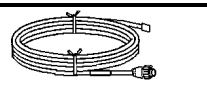	MOD-WPAS0001-030+ 000-164-609-10	1
ｹｰﾌﾞﾙ組品MJ CABLE ASSEMBLY	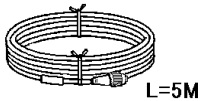	MJ-A3SPF0027-050ZC 000-153-769-11	1
工事材料 INSTALLATION MATERIALS		CP19-01001 001-028-060-00	1

1.ｺｰﾄﾞ番号末尾の[**]は、選択品の代表ｺｰﾄﾞを表します。
CODE NUMBER ENDING WITH "**" INDICATES THE CODE NUMBER OF REPRESENTATIVE MATERIAL.

2.付属品及び一部の図書は、書類ｹｰｽに収められています。
ACCESSORIES AND A PART OF THE DOCUMENTS IS PUT IN THE DOCUMENTS CASE.

(略図の寸法は、参考値です。DIMENSIONS IN DRAWING FOR REFERENCE ONLY.)

NAME	OUTLINE	DESCRIPTION/CODE No.	Q'TY
図書 DOCUMENT			
ﾋｭｰｽﾞ変更のお願い ﾜ/ｴｲ NOTIFICATION DOCUMENT	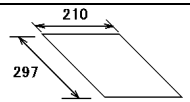	C42-00706-* 000-170-502-1*	1
取扱説明CD OPERATOR'S MANUAL CD	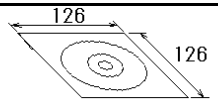	NAVNET3 O/M *CD-ROM* NAVNET3 O/M *CD-ROM* 000-170-477-1* 000-167-721-1*	1
取扱説明書 OPERATOR'S MANUAL	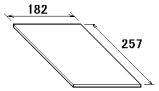	OM*-44441-* 000-170-504-1* **	1
書類ｹｰｽ DOCUMENTS CASE	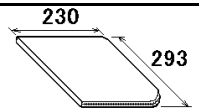	H293XW230XT18 H293XW230XT18 000-168-580-11 000-168-580-10	1
操作要領書(ﾀｹﾞﾝ) OPERATOR'S GUIDE	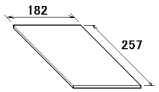	MLG-44440-* 000-170-497-1*	1
装備要領書 INSTALLATION MANUAL	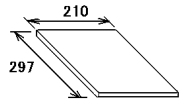	IM*-44440-* 000-170-505-1* **	1
ﾌﾗｯｼｭﾏｳﾝﾄ型紙 FLUSH MOUNTING TEMPLATE	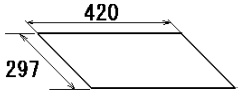	C42-00704-* ﾜ/ｴｲ 000-170-501-1*	1

型式/ｺｰﾄﾞ番号が2段の場合、下段より上段に代わる過渡期品であり、どちらかが入っています。 なお、品質は変わりません。

TWO TYPES AND CODES MAY BE LISTED FOR AN ITEM. THE LOWER PRODUCT MAY BE SHIPPED IN PLACE OF THE UPPER PRODUCT. QUALITY IS THE SAME.

FURUNO

CODE NO.	001-028-050-00	19BA-X-9401 -2
TYPE	CP19-00901	1/1

工事材料表

INSTALLATION MATERIALS

MULTI FUNCTION DISPLAY

MFD8

番号 NO.	名称 NAME	略図 OUTLINE	型名／規格 DESCRIPTIONS		数量 Q'TY	用途／備考 REMARKS
1	ﾋｭｰｽﾞﾊﾘﾏｰｸ FUSE LABEL	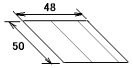	19-028-2231-0	CODE NO. 100-346-980-10	1	
2	Fﾏｳﾝﾄﾊﾞｯｷﾝ8 GASKET	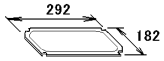	19-028-3122-1	CODE NO. 100-343-141-10	1	
3	ｹｰﾌﾞﾙ保持金具 CABLE FIXING PLATE	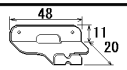	19-028-3123-2	CODE NO. 100-342-592-10	1	
4	+ﾄﾗｽﾀｯﾋﾟﾝﾈｼﾞ 1ｼｭ SELF-TAPPING SCREW	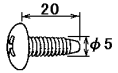	5X20 SUS304	CODE NO. 000-162-608-10	4	
5	ｺﾝﾍﾞｯｸｽ CABLE TIE	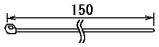	CV-150B	CODE NO. 000-167-183-10	1	
6	+ﾊﾞｲﾝﾄﾞ小ﾈｼﾞ BINDING HEAD SCREW		M3X10 SUS304	CODE NO. 000-162-662-10	2	

型式/ｺｰﾄﾞ番号が２段の場合、下段より上段に代わる過渡期品であり、どちらかが入っています。　なお、品質は変わりません。

TWO TYPES AND CODES MAY BE LISTED FOR AN ITEM. THE LOWER PRODUCT MAY BE SHIPPED IN PLACE OF THE UPPER PRODUCT.
QUALITY IS THE SAME.
（略図の寸法は、参考値です。　DIMENSIONS IN DRAWING FOR REFERENCE ONLY.）

FURUNO ELECTRIC CO ., LTD.

C4444-M01-C

FURUNO

CODE NO.	001-028-060-00	19BA-X-9402 -2
TYPE	CP19-01001	1/1

工事材料表

INSTALLATION MATERIALS

MULTI FUNCTION DISPLAY

MFD12

番号 NO.	名称 NAME	略図 OUTLINE	型名／規格 DESCRIPTIONS		数量 Q'TY	用途／備考 REMARKS
1	Fﾏｳﾝﾄﾖｳｽﾎﾟﾝｼﾞ12 MOUNTING SPONGE	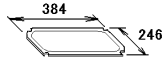	19-028-2062-0	CODE NO. 100-340-040-10	1	
2	ﾋｭｰｽﾞﾊﾘﾏｰｸ FUSE LABEL	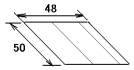	19-028-2231-0	CODE NO. 100-346-980-10	1	
3	ｹｰﾌﾞﾙ保持金具 CABLE FIXING PLATE	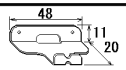	19-028-3123-2	CODE NO. 100-342-592-10	1	
4	+ﾄﾗｽﾀｯﾋﾟﾝﾈｼﾞ 1ｼｭ SELF-TAPPING SCREW	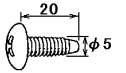	5X20 SUS304	CODE NO. 000-162-608-10	4	
5	ｺﾝﾍﾞｯｸｽ CABLE TIE	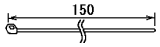	CV-150B	CODE NO. 000-167-183-10	1	
6	+ﾊﾞｲﾝﾄﾞ小ﾈｼﾞ BINDING HEAD SCREW		M3X10 SUS304	CODE NO. 000-162-662-10	2	

型式/ｺｰﾄﾞ番号が２段の場合、下段より上段に代わる過渡期品であり、どちらかが入っています。　なお、品質は変わりません。

TWO TYPES AND CODES MAY BE LISTED FOR AN ITEM. THE LOWER PRODUCT MAY BE SHIPPED IN PLACE OF THE UPPER PRODUCT.
QUALITY IS THE SAME.
（略図の寸法は、参考値です。　DIMENSIONS IN DRAWING FOR REFERENCE ONLY.）

FURUNO ELECTRIC CO ., LTD.

C4445-M01-C

FURUNO

CODE NO.	001-023-060-00	19AY-X-9501 -4
TYPE	FP19-01101	1/1

付属品表

ACCESSORIES

MCU-001/DCU12

番号 NO.	名称 NAME	略図 OUTLINE	型名／規格 DESCRIPTIONS	数量 Q'TY	用途／備考 REMARKS
1	ﾊﾟﾈﾙﾘﾑｰﾊﾞｰ PANEL REMOVER	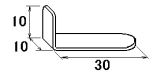	19-028-3124-1 CODE NO. 100-340-471-10	1	
2	ﾌｨﾙﾀｰｸﾘｰﾅｰ LCD CLEANING CLOTH	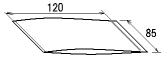	19-028-3125-2 CODE NO. 100-360-672-10	1	

型式/ｺｰﾄﾞ番号が２段の場合、下段より上段に代わる過渡期品であり、どちらかが入っています。　なお、品質は変わりません。

TWO TYPES AND CODES MAY BE LISTED FOR AN ITEM. THE LOWER PRODUCT MAY BE SHIPPED IN PLACE OF THE UPPER PRODUCT. QUALITY IS THE SAME.

（略図の寸法は、参考値です。　DIMENSIONS IN DRAWING FOR REFERENCE ONLY.）

FURUNO ELECTRIC CO., LTD.

C4446-F01-E

FURUNO

CODE NO.	001-028-020-00	19BA-X-9301 -0 1/1
TYPE	SP19-00701	BOX NO. P

SHIP NO.	SPARE PARTS LIST FOR	U S E	SETS PER VESSEL
	MULTI FUNCTION DISPLAY MFD8		

ITEM NO.	NAME OF PART	OUTLINE	DWG. NO. OR TYPE NO.	QUANTITY WORKING PER SET	QUANTITY WORKING PER VES	QUANTITY SPARE	REMARKS/CODE NO.
1	ﾋｭｰｽﾞ FUSE GLASS TUBE TYPE	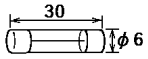	FGBO-A 125V 5A PBF			2	000-155-853-10
2	ﾋｭｰｽﾞ FUSE GLASS TUBE TYPE	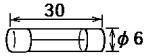	FGBO 125V 10A PBF			2	000-155-826-10

MFR'S NAME	FURUNO ELECTRIC CO.,LTD.	DWG NO.	C4444-P01-A	1/1

（略図の寸法は、参考値です。　DIMENSIONS IN DRAWING FOR REFERENCE ONLY.）

型式/ｺｰﾄﾞ番号が２段の場合、下段より上段に代わる過渡期品であり、どちらかが入っています。　なお、品質は変わりません。

TWO TYPES AND CODES MAY BE LISTED FOR AN ITEM. THE LOWER PRODUCT MAY BE SHIPPED IN PLACE OF THE UPPER PRODUCT. QUALITY IS THE SAME.

FURUNO

CODE NO.	001-028-030-00	19BA-X-9302 -1 1/1
TYPE	SP19-00801	BOX NO. P

SHIP NO.	SPARE PARTS LIST FOR	U S E	SETS PER VESSEL
	MULTI FUNCTION DISPLAY MFD12		

ITEM NO.	NAME OF PART	OUTLINE	DWG. NO. OR TYPE NO.	QUANTITY WORKING PER SET	QUANTITY WORKING PER VES	QUANTITY SPARE	REMARKS/CODE NO.
1	ﾋｭｰｽﾞ FUSE GLASS TUBE TYPE	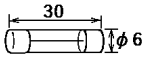	FGBO 125V 10A PBF			2	000-155-826-10
2	ﾋｭｰｽﾞ FUSE GLASS TUBE TYPE	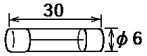	FGBO 125V 20A			2	000-155-780-10

MFR'S NAME	FURUNO ELECTRIC CO.,LTD.	DWG NO.	C4445-P01-B	1/1

（略図の寸法は、参考値です。 DIMENSIONS IN DRAWING FOR REFERENCE ONLY.）

型式/ｺｰﾄﾞ番号が２段の場合、下段より上段に代わる過渡期品であり、どちらかが入っています。 なお、品質は変わりません。

TWO TYPES AND CODES MAY BE LISTED FOR AN ITEM. THE LOWER PRODUCT MAY BE SHIPPED IN PLACE OF THE UPPER PRODUCT. QUALITY IS THE SAME.

FURUNO

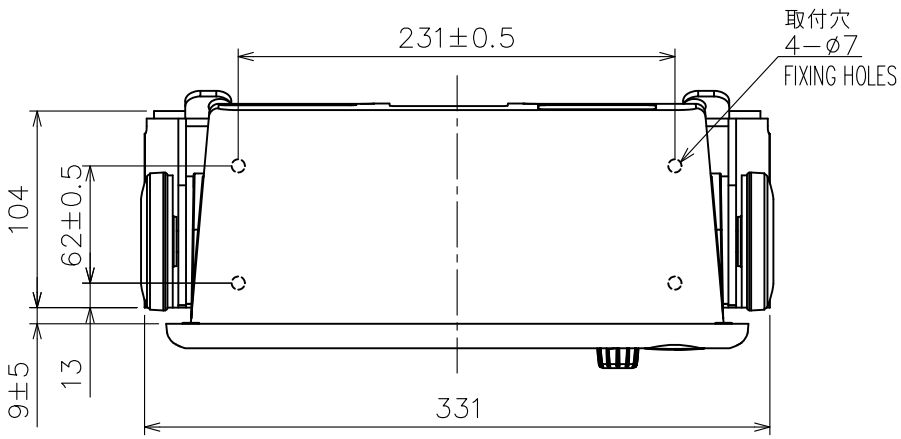

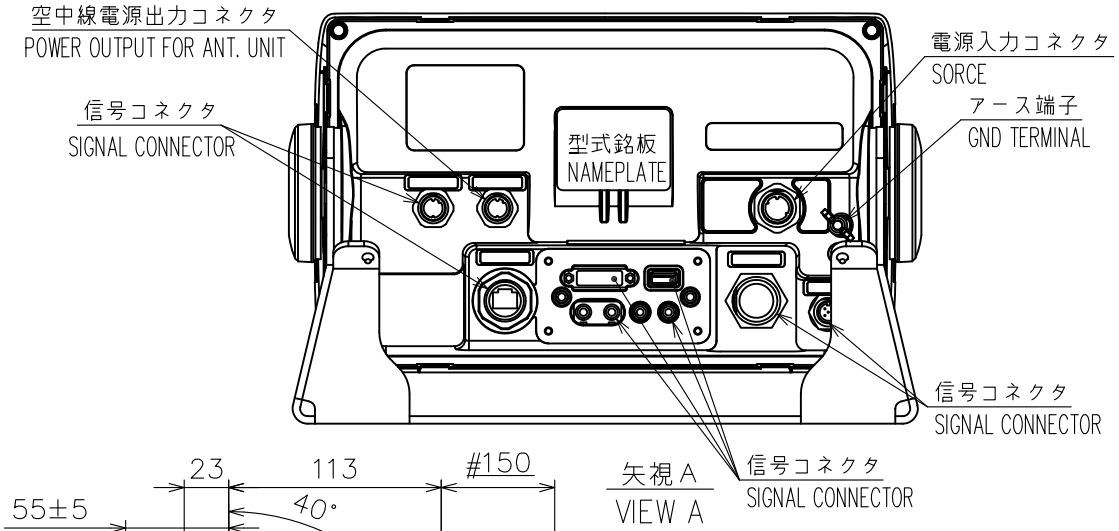

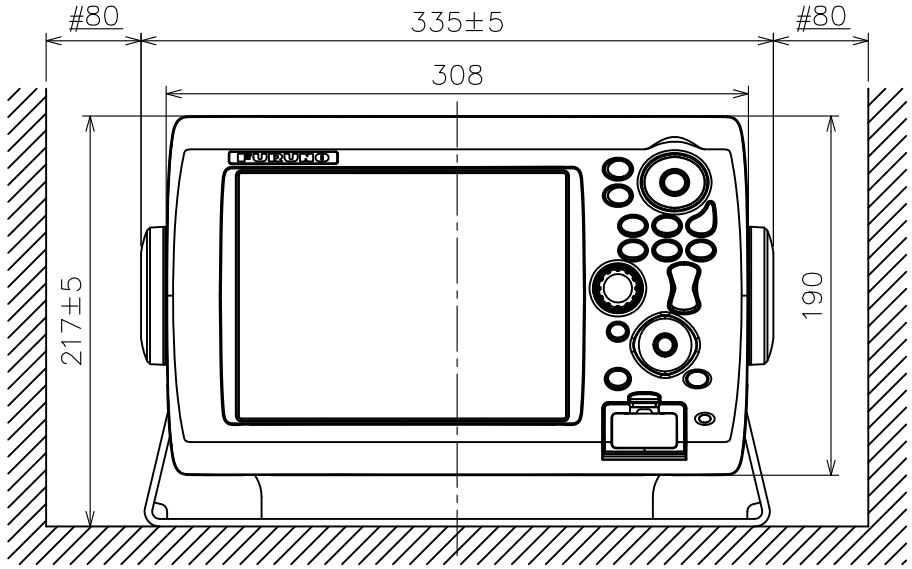

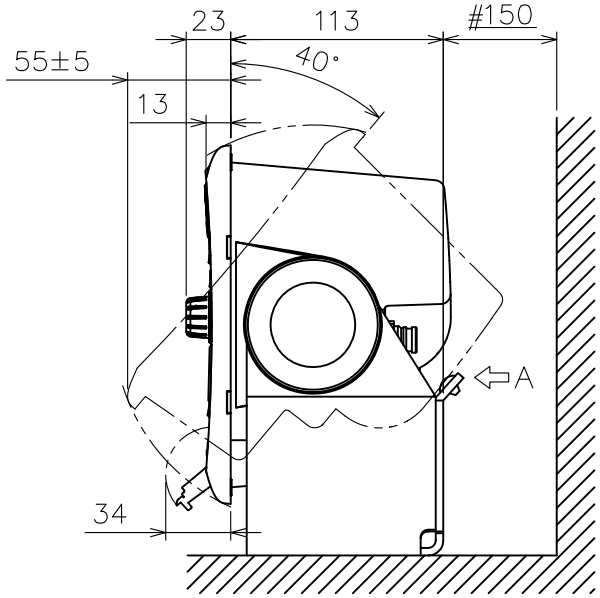

表 1 TABLE 1

寸法区分（ｍｍ） DIMENSION	公差（ｍｍ） TOLERANCE
Ｌ≦５０	±１．５
５０<Ｌ≦１００	±２．５
１００<Ｌ≦５００	±３

注　記

1）　＃印寸法は最小サービス空間寸法とする。

2）　指定外の寸法公差は表1による。

3）　取付用ネジはトラスタッピンネジ呼び径５×２０を使用のこと。

NOTE

1. #: MINIMUM SERVICE CLEARANCE.
2. TABLE 1 INDICATES TOLERANCE OF DIMENSIONS WHICH IS NOT SPECIFIED.
3. USE TAPPING SCREWS ø5x20 FOR FIXING THE UNIT.

DRAWN Oct. 17 '07 T.YAMASAKI		TITLE	MFD8
CHECKED Oct. 18 '07 T.TAKENO		名称	マルチファンクションディスプレイ（卓上装備）
APPROVED Oct.22'07 R.Esumi			外寸図
SCALE 1/4	MASS 4.7 ±10% kg 質量はケーブルを含まず MASS W/O CABLES	NAME	MULTI FUNCTION DISPLAY (TABLETOP MOUNT)
DWG.No. C4444-G01- A	REF.No. 19-028-310G-1		OUTLINE DRAWING

FURUNO ELECTRIC CO., LTD.

FURUNO

表１ TABLE 1

寸法区分（ｍｍ） DIMENSION	公差（ｍｍ） TOLERANCE
Ｌ≦５０	±１．５
５０<Ｌ≦１００	±２．５
１００<Ｌ≦５００	±３

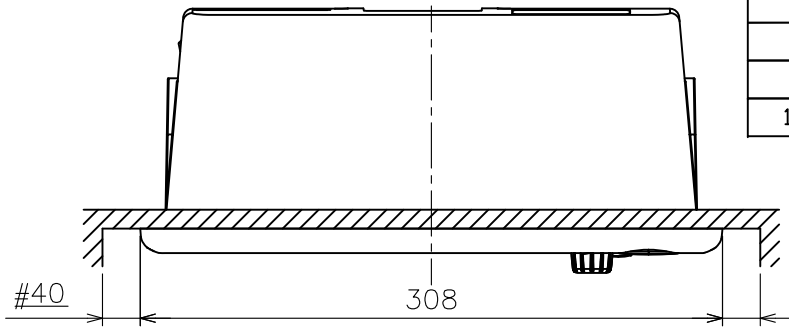

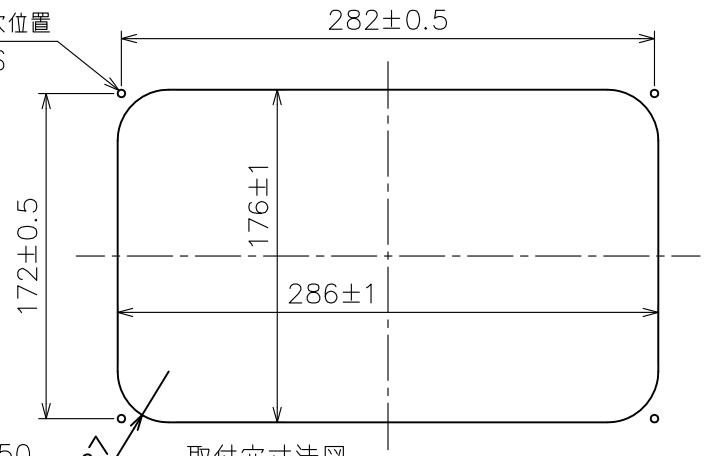

取付穴寸法図
CUTOUT DIMENSIONS

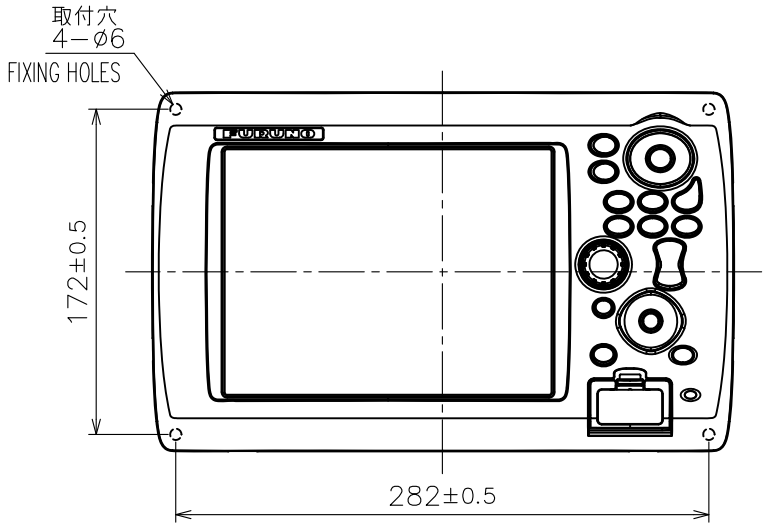

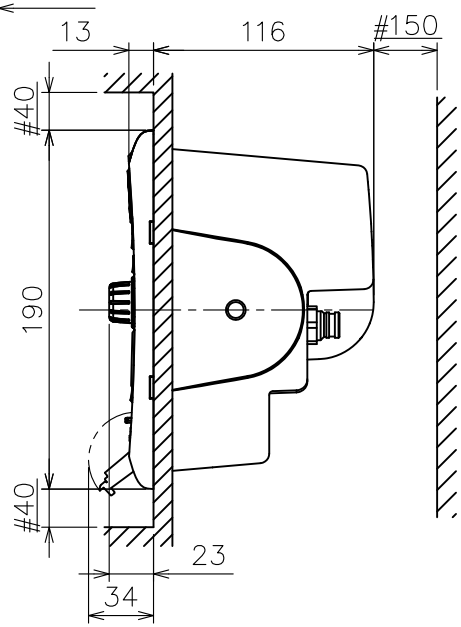

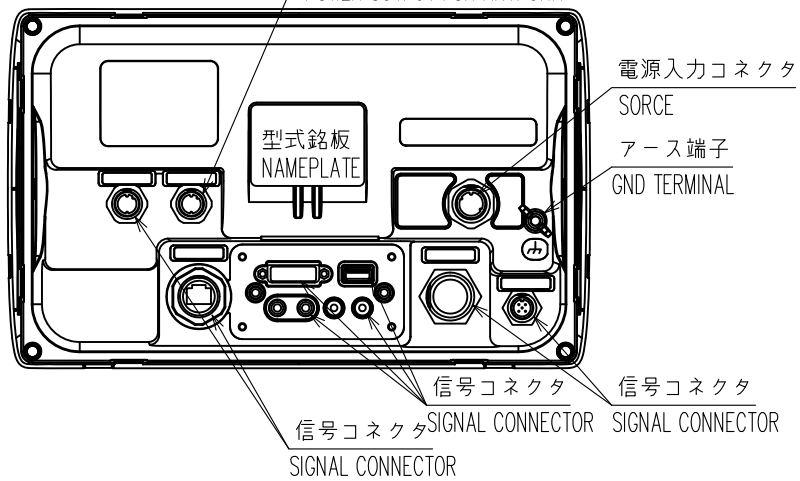

注　記
1）　#印寸法は最小サービス空間寸法とする。
2）　指定外の寸法公差は表1による。
3）　取付用ネジはトラスタッピンネジ呼び径５×２０を使用のこと。

NOTE
1. #: MINIMUM SERVICE CLEARANCE.
2. TABLE 1 INDICATES TOLERANCE OF DIMENSIONS WHICH IS NOT SPECIFIED.
3. USE TAPPING SCREWS ø5x20 FOR FIXING THE UNIT.

DRAWN Oct. 17 '07 T.YAMASAKI		TITLE	MFD8
CHECKED Oct. 18 '07 T.TAKENO		名称	マルチファンクションディスプレイ（埋込装備）
APPROVED Oct.22'07 R.Esumi			外寸図
SCALE 1/4	MASS 3.9 ±10% kg 質量はケーブルを含まず MASS W/O CABLES	NAME	MULTI FUNCTION DISPLAY (FLUSH MOUNT)
DWG.No. C4444-G02- A	REF.No. 19-028-300G-1		OUTLINE DRAWING

D-2

FURUNO ELECTRIC CO., LTD.

FURUNO

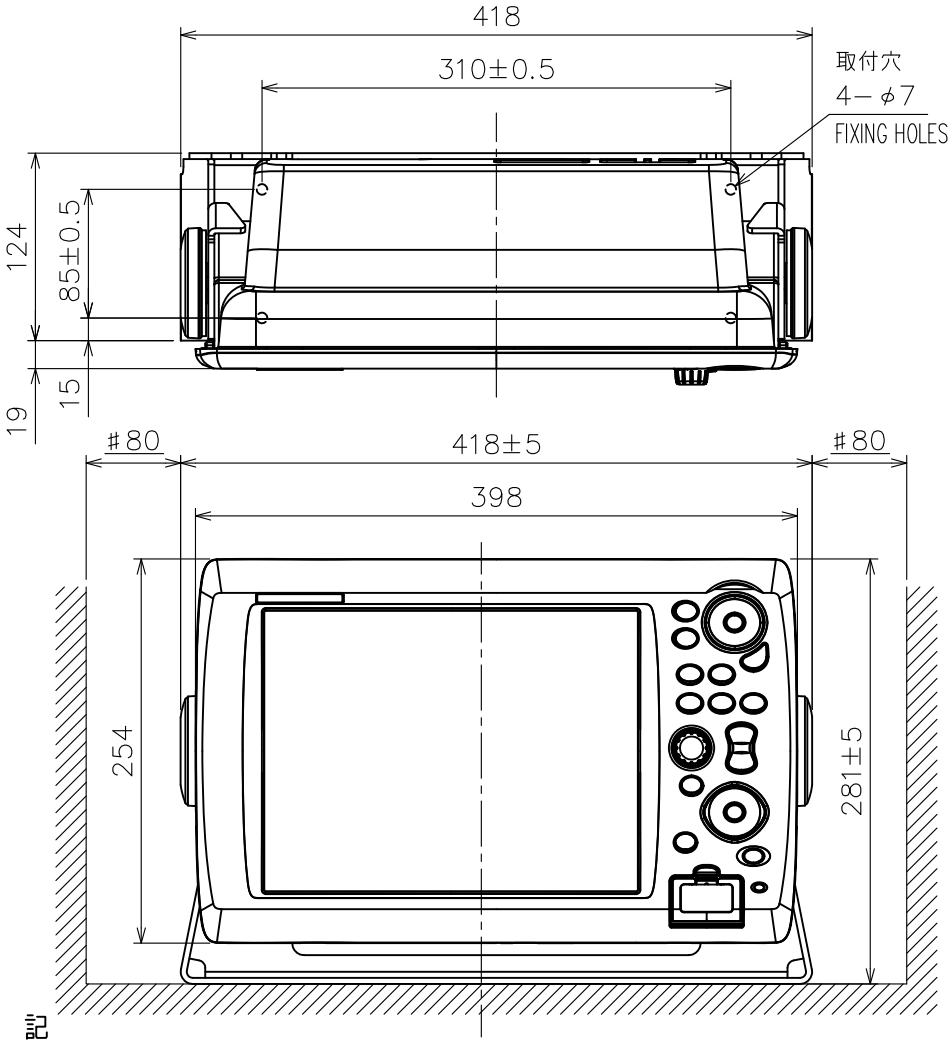

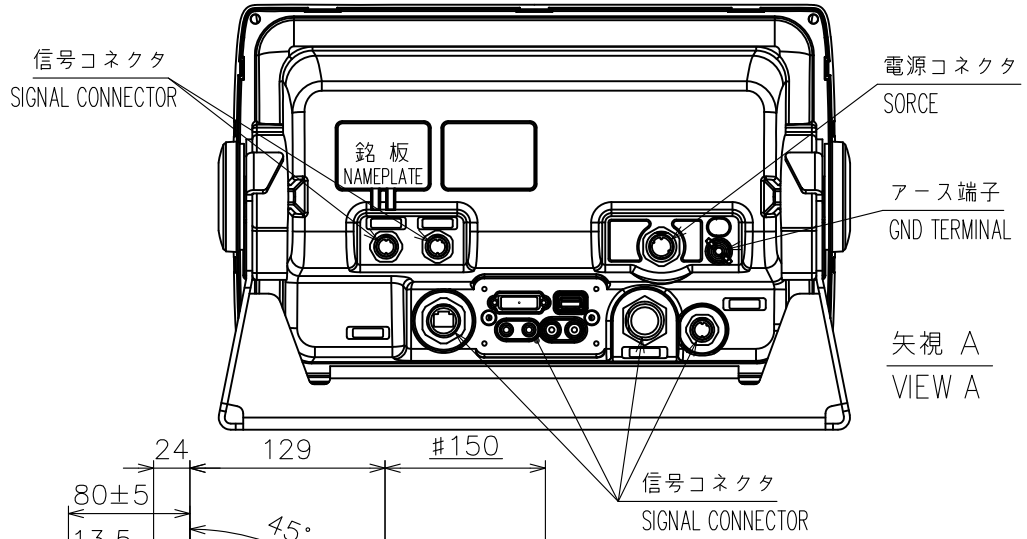

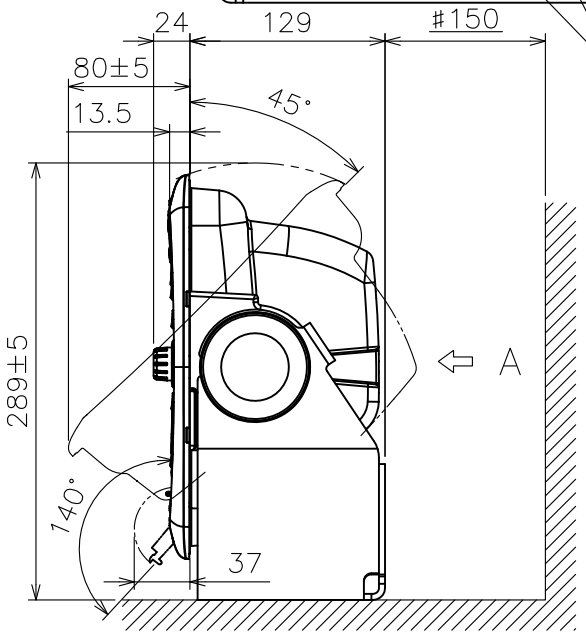

表１ TABLE 1

寸法区分（ｍｍ） DIMENSION	公差（ｍｍ） TOLERANCE
Ｌ≦５０	±１．５
５０<Ｌ≦１００	±２．５
１００<Ｌ≦５００	±３

注　記

１）　#印寸法は最小サービス空間寸法とする。

２）　指定外の寸法公差は表１による。

３）　取付用ネジは＋トラスタッピンネジ呼び径５×２０を使用のこと。

NOTE

1. #: MINIMUM SERVICE CLEARANCE.
2. TABLE 1 INDICATES TOLERANCE OF DIMENSIONS WHICH IS NOT SPECIFIED.
3. USE TAPPING SCREWS ø5x20 FOR FIXING THE UNIT.

DRAWN Oct. 17 '07 T.YAMASAKI		TITLE	MFD12
CHECKED Oct. 18 '07 T.TAKENO		名称	マルチファンクションディスプレイ（卓上装備）
APPROVED Oct.23'07 R.Esumi			外寸図
SCALE 1/5	MASS 6.8 ±10% kg 質量はケーブルを含まず MASS W/O CABLES	NAME	MULTI FUNCTION DISPLAY (TABLETOP MOUNT)
DWG.No. C4445-G01- A	REF.No. 19-028-225G-2		OUTLINE DRAWING

FURUNO ELECTRIC CO., LTD.

FURUNO

表１ TABLE 1

寸法区分（ｍｍ） DIMENSION	公差（ｍｍ） TOLERANCE
L≦50	±1．5
50<L≦100	±2．5
100<L≦500	±3

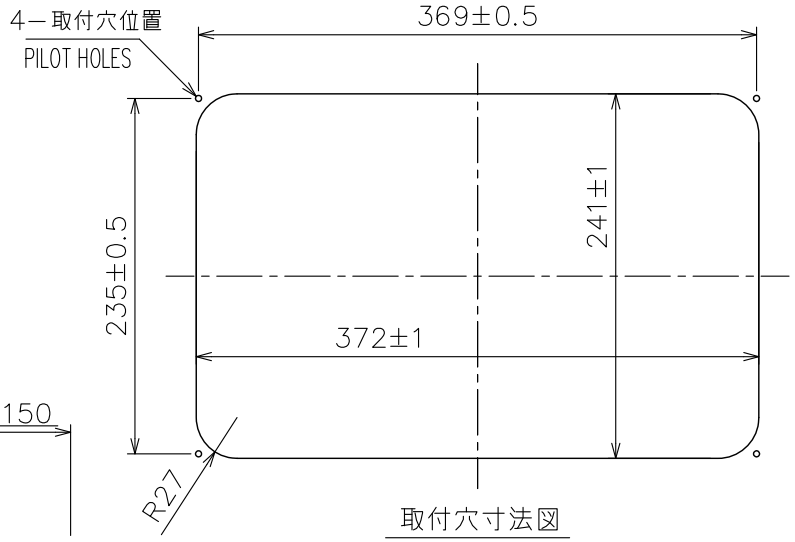

取付穴寸法図
CUTOUT DIMENSIONS

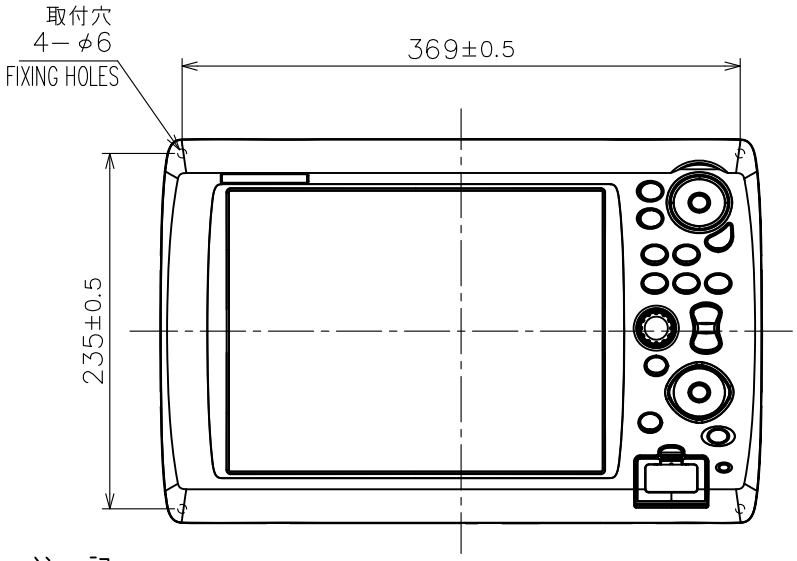

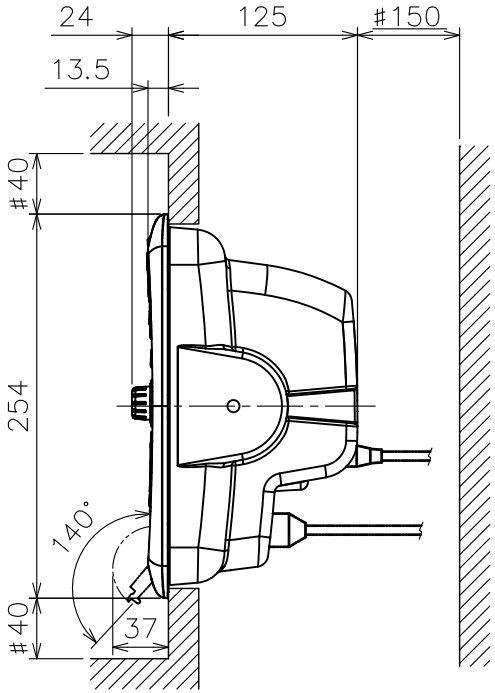

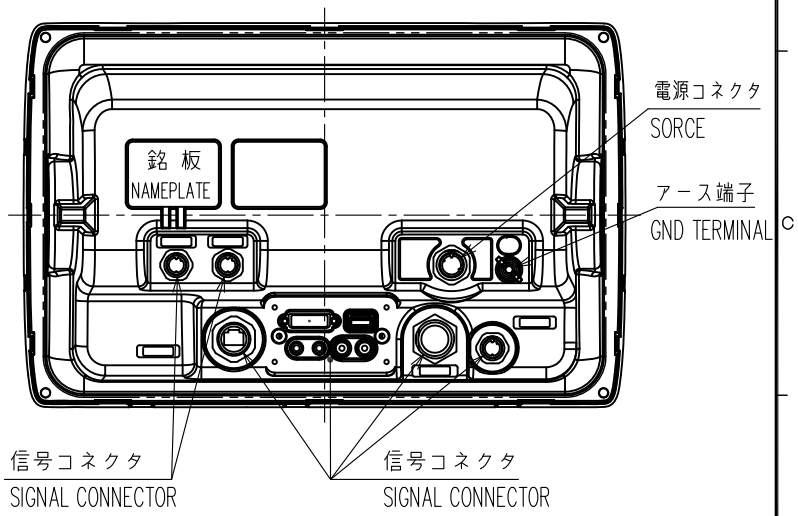

注　記
１）　#印寸法は最小サービス空間寸法とする。
２）　指定外の寸法公差は表１による。
３）　取付用ネジは＋トラスタッピンネジ呼び径５Ｘ２０を使用のこと。

NOTE
1. #: MINIMUM SERVICE CLEARANCE.
2. TABLE 1 INDICATES TOLERANCE OF DIMENSIONS WHICH IS NOT SPECIFIED.
3. USE TAPPING SCREWS ø5x20 FOR FIXING THE UNIT.

DRAWN Oct. 17 '07 T.YAMASAKI		TITLE	MFD12
CHECKED Oct. 18 '07 T.TAKENO		名称	マルチファンクションディスプレイ（埋込装備）
APPROVED Oct.23'07 R.Esumi			外寸図
SCALE 1/5	MASS 5.4 ±10% kg 質量はケーブルを含まず MASS W/O CABLES	NAME	MULTI FUNCTION DISPLAY (FLUSH MOUNT)
DWG.No. C4445-G02- A	REF.No. 19-028-220G-1		OUTLINE DRAWING

FURUNO ELECTRIC CO., LTD.

FURUNO

S-1

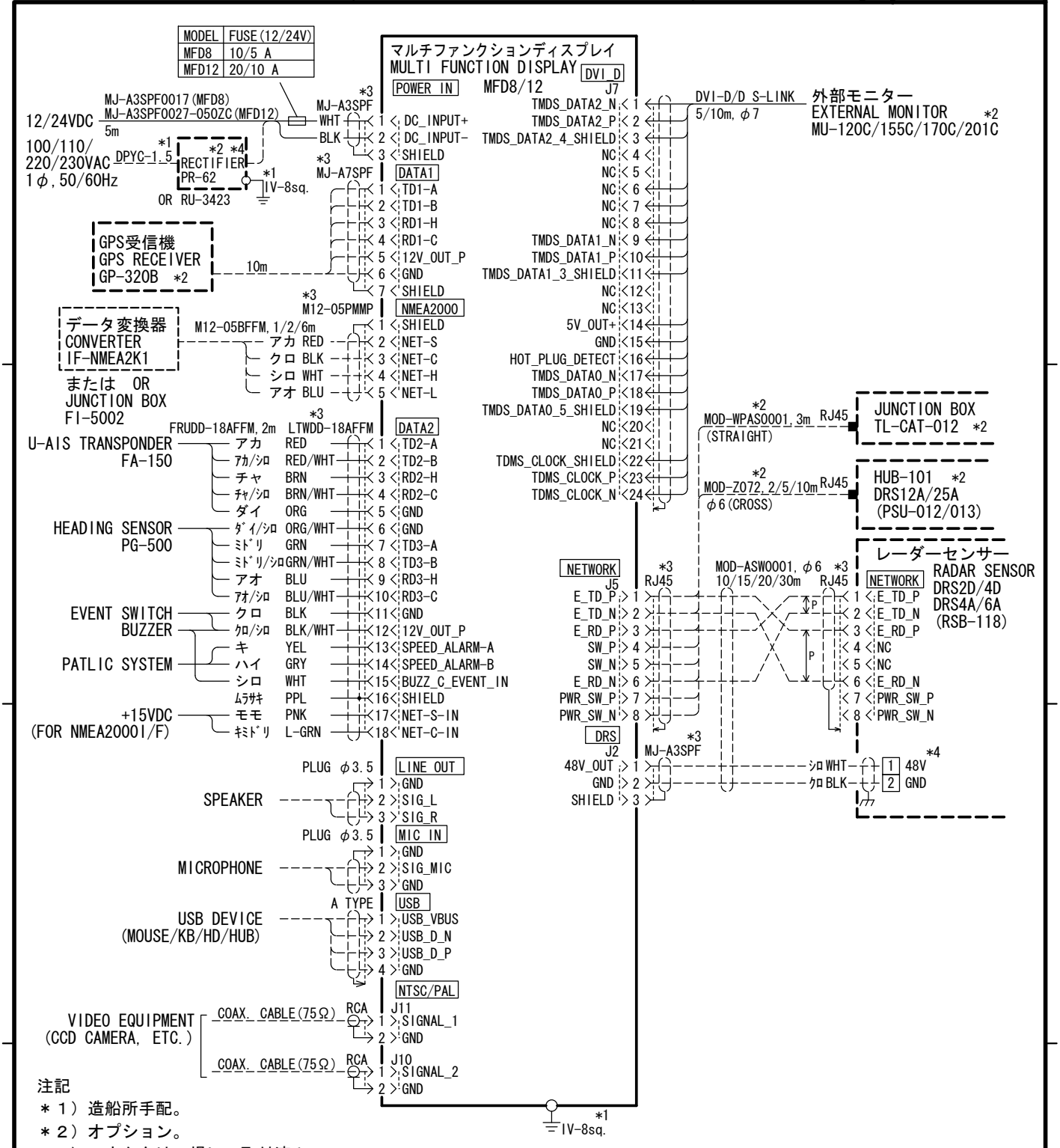

注記

＊１）造船所手配。

＊２）オプション。

＊３）コネクタは工場にて取付済み。

＊４）レーダーセンサーに接続するとき、整流器はRU-3423を使用する。

NOTE

*1: SHIPYARD SUPPLY.

*2: OPTION.

*3: CONNECTOR PLUG FITTED AT FACTORY.

*4: USE RECTIFIER RU-3423 TO CONNECT A RADAR SENSOR.

DRAWN 17/May/2013 T.YAMASAKI		TITLE	MFD8/12
CHECKED 17/May/2013 H.MAKI		名称	マルチファンクションディスプレイ
APPROVED 17/May/2013 H.MAKI			相互結線図
SCALE / MASS kg		NAME	MULTI-FUNCTION DISPLAY
DWG No. C4444-C01- D	REF. No. 19-028-5002-3		INTERCONNECTION DIAGRAM

FURUNO ELECTRIC CO., LTD.

ECF
(Elemental Chlorine Free)
The paper used in this manual
is elemental chlorine free.

FURUNO ELECTRIC CO., LTD.

9-52 Ashihara-cho,
Nishinomiya, 662-8580, JAPAN

・FURUNO Authorized Distributor/Dealer

 Printed in Japan

A : APR. 2008
D1 : FEB. 07, 2014

Pub. No. IME-44440-D1

(DAMI) MFD8/12

0 0 0 1 6 7 8 0 7 1 3