FURUNO

Installation Manual
INMARSAT-1 MES
Model FELCOM18

SAFETY INSTRUCTIONS i
SYSTEM CONFIGURATION ii
EQUIPMENT LISTS iii

1. MOUNTING 1-1
1.1 Antenna Unit 1-1
1.2 Terminal Unit 1-3
1.3 Distress Alert/Received Call Unit IC-305/Alarm Unit IC-306 1-5
1.4 Printer (option) 1-6
1.5 AC/DC Power Supply Unit PR-240 (option) 1-7
1.6 Junction Box IC-318 1-8

2. WIRING 2-1
2.1 Antenna Cable Connector at the Terminal Unit 2-2
2.2 Distress Alert/Received Call Unit IC-305 2-7
2.3 Alarm Unit IC-306 2-7
2.4 Junction Box IC-318 2-8

3. INITIAL SETTINGS 3-1
3.1 How to Set the IMN (INMARSAT MOBILE NO.) 3-1
3.2 How to Set External Equipment 3-2
3.3 How to Set the Alarm Contact 3-3
3.4 How to Set up the AMS/BAM 3-3
3.5 How to Select Position-fixing Equipment 3-6
3.6 How to Set up for 2nd DTE 3-6
3.7 How to Set the Russian Language 3-7
3.8 How to Use the Paper Save Function 3-7
3.9 How to Output EGC Messages 3-8

4. HOW TO INSTALL OPTIONAL EQUIPMENT 4-1
4.1 GPS Board OP16-62 4-1
4.2 IPX2 Kit OP16-58/OP16-59 4-2
4.3 Waterproofing Kit OP16-60/OP16-67/OP16-68 4-7

5. HOW TO CHANGE POWER SUPPLY SPECIFICATIONS 5-1

APPENDIX 1 JIS CABLE GUIDE AP-1
PACKING LISTS A-1
OUTLINE DRAWINGS D-1
INTERCONNECTION DIAGRAM S-1

FURUNO ELECTRIC CO., LTD.

www.furuno.com

All brand and product names are trademarks, registered trademarks or service marks of their respective holders.

ECF
(Elemental Chlorine Free)
The paper used in this manual
is elemental chlorine free.

FURUNO ELECTRIC CO., LTD.

9-52 Ashihara-cho,
Nishinomiya, 662-8580, JAPAN

・FURUNO Authorized Distributor/Dealer

All rights reserved.

Printed in Japan

A : JUN. 2012
K : APR. 02, 2019

Pub. No. IME-56740-K

(DAMI) FELCOM18

0 0 0 1 7 6 5 1 9 1 9

SAFETY INSTRUCTIONS

WARNING

ELECTRICAL SHOCK HAZARD

Do not open the equipment unless totally familiar with electrical circuits and service manual.

Only qualified personnel should work inside the equipment.

Do not approach the radome closer than 0.5 m when it is transmitting.

Microwave radiation can cause severe injury or illness.
Radiation level:
10 W/m² at 0.5 m

Turn off the power at the mains switchboard before beginning the installation. Post a sign near the switch to indicate it should not be turned on while the equipment is being installed.

Fire, electrical shock or serious injury can result if the power is left on or is applied while the eqiuipment is being installed.

CAUTION

Confirm that the power supply voltage is compatible with the voltage rating of the equipment.

Connection to the wrong power supply can cause fire or equipment damage. The voltage rating appears on the label at the rear of the terminal unit.

Use the correct fuse.

Use of wrong fuse can result in damage to the equipment.

Keep the following compass safe distances.

	Standard	Steering
Antenna Unit IC-118	0.30 m	0.30 m
Terminal Unit IC-218	0.65 m	0.40 m
Printer PP-510 or PP-520	1.00 m	0.80 m
Junction Box IC-318	0.90 m	0.60 m
Distress Alert/ Received Call Unit IC-305	0.50 m	0.30 m
Alarm Unit IC-306	0.50 m	0.30 m
SSAS Alert Unit IC-307	0.70 m	0.45 m
AC/DC Power Supply Unit PR-240	0.90 m	0.60 m
Mini keyboard	0.30 m	0.30 m

Ground the equipment to prevent electrical shock and mutual interface.

SYSTEM CONFIGURATION

Standard configuration is shown with solid line.

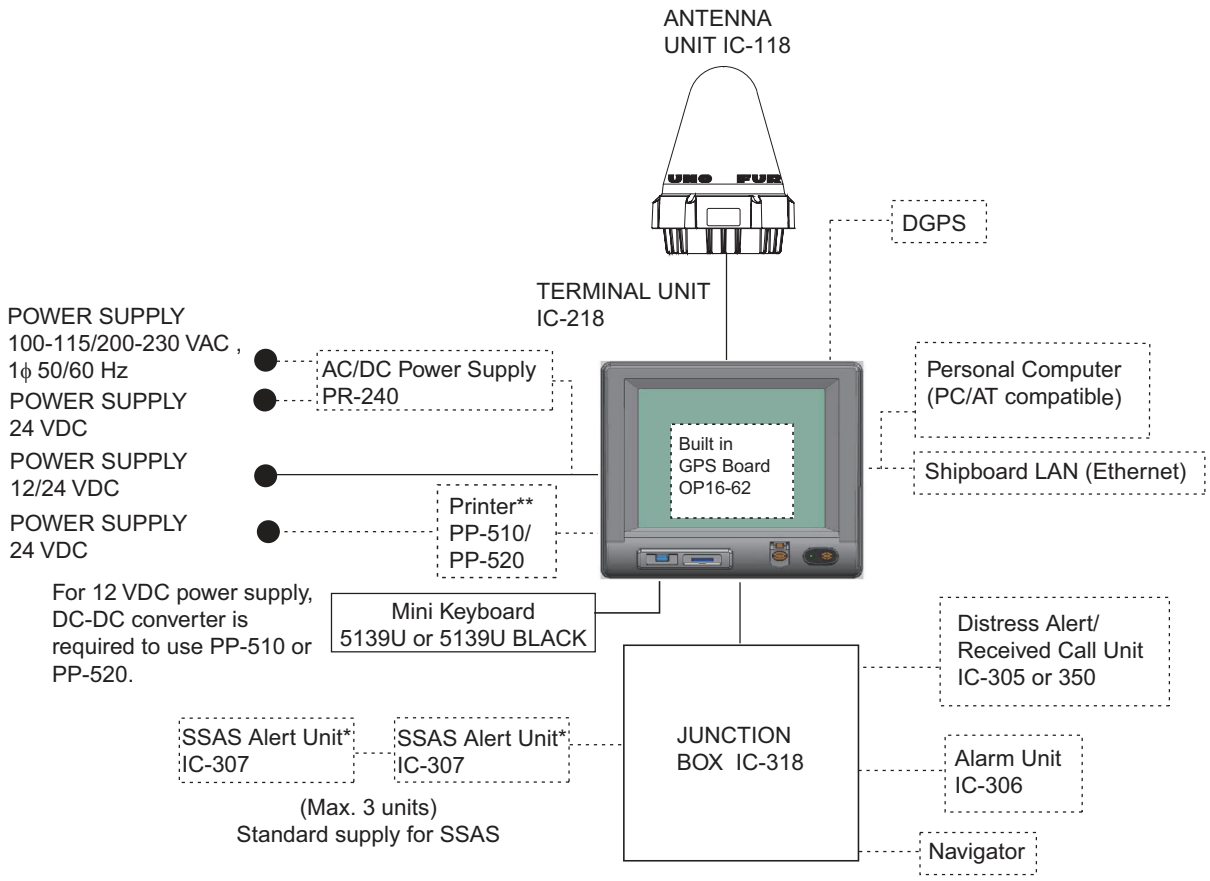

*: At least two SSAS Alert Units are required.
**: Mandatory for EGC operation as required by IMO RES. A.664(16).

CATEGORY OF UNITS (required by IEC60945):

Unit	Category
Terminal Unit	Protected from the weather (For indoor installation)
Antenna Unit	Exposed to the weather (For installation on the open deck)
Other Units	Protected from the weather (For indoor installation)

EQUIPMENT LISTS

Standard supply

Name	Type	Code No.	Qty	Remarks
Antenna Unit	IC-118	-	1	w/FP16-02501
Terminal Unit	IC-218	-	1	w/CP16-05200, SP16-01301, FP16-02600
Junction Box	IC-318	-	1	
SSAS Alert Unit	IC-307	-	2	For SSAS only
Installation Materials	CP16-05511	001-189-560	1	For IC-118, 30 m

Optional supply

Name	Type	Code No.	Qty	Remarks
Printer	PP-520	-	1	
Distress Alert/ Received Call Unit	IC-305	-	1	
Alarm Unit	IC-306	-	1	
AC/DC Power Supply Unit	PR-240	-	1	
SSAS Alert Unit	IC-307	-	1	
PC Terminal Software	OP16-57	001-180-050	1	
Cable Assy.	COSPEVVSBC 5PX0.2LF	000-560-452-11	1	5P, 10 m
	COSPEVVSBC 5PX0.2LF	000-103-868-11	1	5P, 20 m
	COSPEVVSBC 5PX0.2LF	000-103-869-11	1	5P, 30m
	COSPEVVSBC 5PX0.2LF	000-132-829-11	1	5P, 40 m
	COSPEVVSBC 5PX0.2LF	000-132-828-11	1	5P, 50 m
Flush Mount Kit	OP16-27	004-448-000	1	For IC-305/306
	OP16-28	004-448-010	1	For IC-307
Antenna Unit	IC-118	-	1	
Antenna Bracket	CP16-05602	001-189-610	1	For IC-118
Antenna Base w/Hose Clamp	OP16-72	001-323-420	1	
Antenna Base w/ Mount Pipe	OP16-73	001-323-430	1	
Antenna Base 2/U Bolt	OP16-74	001-313-440	1	
Antenna Base	OP16-75	001-313-450	1	
IPX2 Kit	OP16-58	001-180-070	1	D-sub cables
Water Proof Kit	OP16-59	001-180-080	1	For IC-218
	OP16-60	001-180-090	1	For IC-318
	OP16-67	001-189-380	1	For IC-305
	OP16-68	001-189-400	1	For IC-307
GPS Board Kit	OP16-62	001-180-100	1	For IC-218
Bracket Kit	OP16-65	001-182-900	1	
Key Template	OP05-135	001-184-560	1	For Russian flag vessels

Name	Type	Code No.	Qty	Remarks
Installation Materials	CP16-05750	000-021-704	1	w/o pipe, 30 m
	CP16-05790	000-021-715		w/o pipe, 30 m, for armored cable
	CP16-05760	000-021-713		w/o pipe, 40/50 m, for armored cable
	CP16-05770	000-021-714		w/o pipe, 100 m, for armored cable
Hose clamp	OP16-76-1	001-443-450	1	Nominal Diameter, Mast Diameter For 40A (ϕ 48.6)
	OP16-76-2	001-443-460	1	Nominal Diameter, Mast Diameter For 65A to 80A (ϕ 76.3 to 89.1)
	OP16-76-3	001-443-470	1	Nominal Diameter, Mast Diameter For 90A to 100A (ϕ 101.6 to 114.3)

1. MOUNTING

NOTICE

Do not apply paint, anti-corrosive sealant or contact spray to coating or plastic parts of the equipment.

Those items contain organic solvents that can damage coating and plastic parts, especially plastic connectors.

1.1 Antenna Unit

1.1.1 Mounting location

Refer to IMO resolutions A663(16) and A.807(19), as amended.

- Mount the omnidirectional antenna unit high atop a mast clear of stays and the turning diameter of a radar antenna. The ideal mounting location would be where no obstacle appears in the fore and aft directions down to -5° and down to 15° in the port and starboard directions. The concept is illustrated in the figure below. Shadow sector of the antenna mast, whip antenna, etc. should be within two degrees at one meter from the antenna unit.

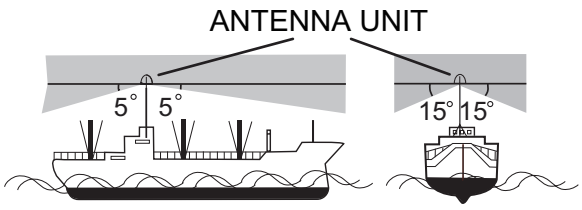

- When two FELCOMs are installed, the horizontal separation shall be at least 1.5 m and the vertical separation, 1 m or more.

- If Inmarsat ship earth stations other than C are installed, separate the Inmarsat antenna at least 8 m from the Inmarsat-C antenna.

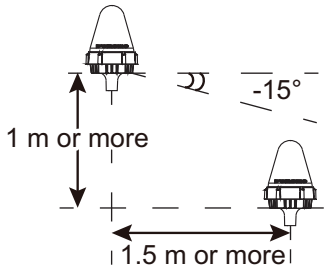

Installation of two antenna units

- Separate the antenna unit from an S-band radar as shown in the figure to the right:

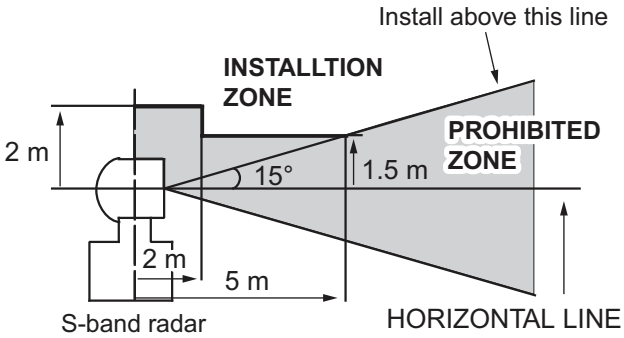

- The allowable vibration level as specified by Inmarsat is as shown in the table below.

Allowable vibration level

Frequency	Level
2 to 10 Hz	2.54 mm Peak Amplitude
10 to 100 Hz	9.8 m/s2 Peak Acceleration

- Avoid the location near tunnels and stacks; smoke and soot on the radome can lower signal level (10 m or more in horizontal distance).
- Separate the antenna unit 5 m from HF, VHF of 27 MHz antenna.

1.1.2 Mounting

The antenna cable is available in lengths of 30 m, 50 m and 100 m (see table below).

Cable length	Type	Remarks
30 m (no armor)	TP5FBAW-5DFB	TNC connector at both ends
30 m (w/armor)	5D-FB-CV-NP	N connector on one end (antenna side)
50 m (w/armor)	8D-FB-CV	
100 m (w/armor)	12D-SFA-LITE-CV	

Note: When using the optional installation kit to install the antenna, refer to the outline drawings at the back of this manual.

Antenna installation

Select a location to weld the grounding stud bolt (M6), keeping in mind the length of the grounding cable RW-4747 (Included as installation materials) is 340 mm. The location for welding the grounding stud bolt should allow the antenna ground and mast ground to be connected with the grounding cable (to ground lightning strikes). For detailed measurements, refer to the outline drawings at the back of this manual.

For information on wiring the antenna cable, refer to the manual included with the antenna unit.

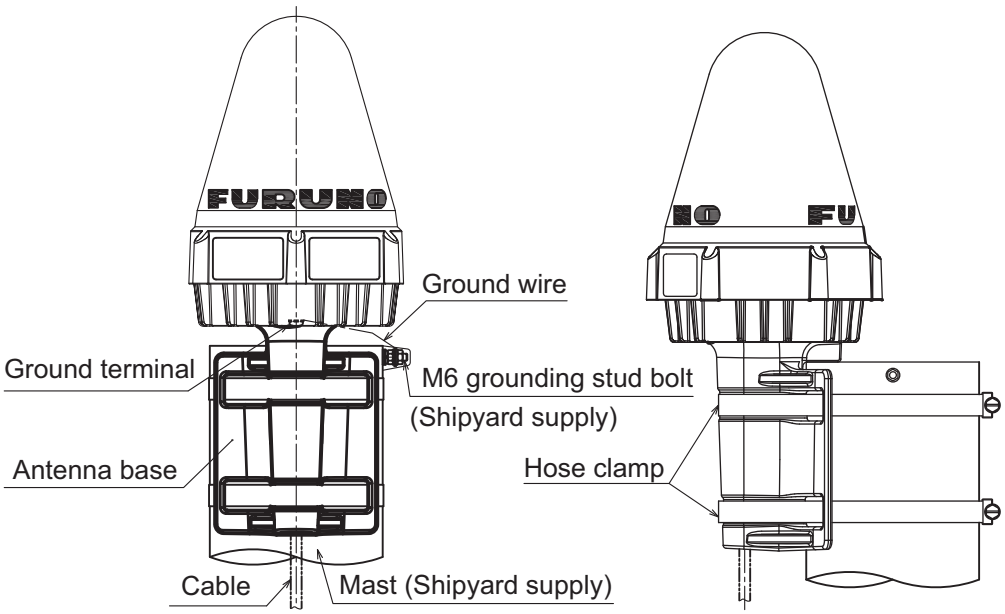

1.2 Terminal Unit

Select a mounting location, considering the following points.

- The temperature and humidity should be moderate and stable.
- For maintenance and checking purposes, leave sufficient space at the sides and rear of the unit and leave slack in cables.

Mounting

Tabletop mount

1) Fix the hanger (option) to a table with four self-tapping screws (5x20, supplied), referring to the outline drawing at the back of this manual.
2) Screw knobs and washers to terminal unit loosely.
3) Set the terminal unit to the hanger and tighten knobs.

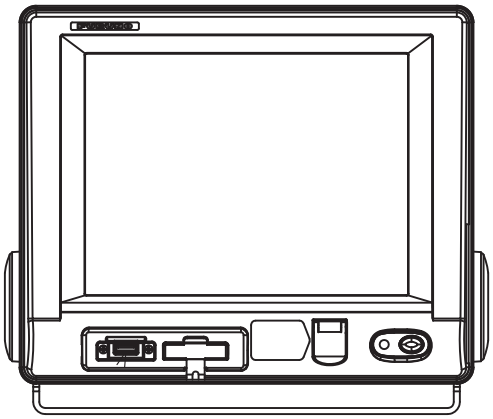

Terminal unit, tabletop mounting

Flush mount

Use locally supplied pan head screws (M4x20) when the thickness of the bulkhead is from 11 to 14 mm. For bulkhead which exceeds 14 mm in thickness the length of the pan head screws should be bulkhead thickness A +7.8±2 mm. Also the length of B should be max. 8 mm (B≤8 mm).

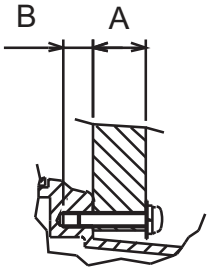

Bulkhead, sectional view

1. Prepare a cutout in the mounting location whose dimensions are as shown in the outline drawing at the back of this manual.
2. Fix the display unit with six pan head screws, inserting them from the inside of the bulkhead. Refer to the outline drawing at the end of this manual.

How to connect the LAN cable

Connect the LAN cable using the sponge and LAN cable support (supplied). This procedure should be done even if the LAN cable is not used, to waterproof the unit.

1. Attach the sponge for LAN terminal to the LAN terminal.

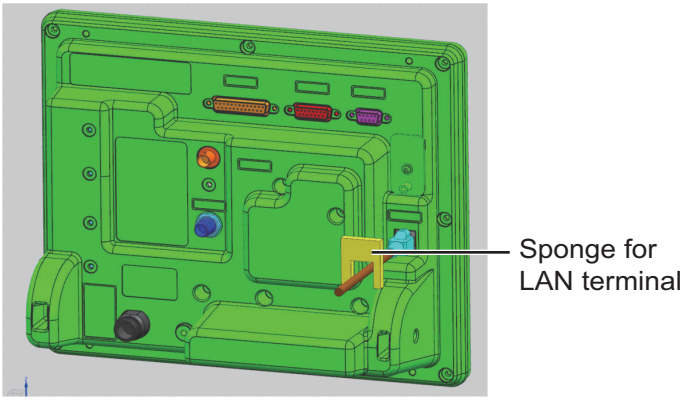

2. Use the binding screw (pre-attached at the rear of the unit) to fix the LAN cable support.

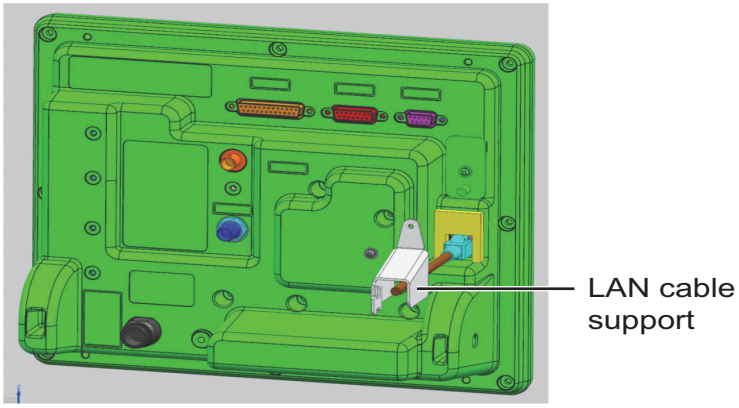

3. Connect the LAN cable to the terminal unit. Fix the LAN cable to the LAN cable support with a cable tie (supplied).

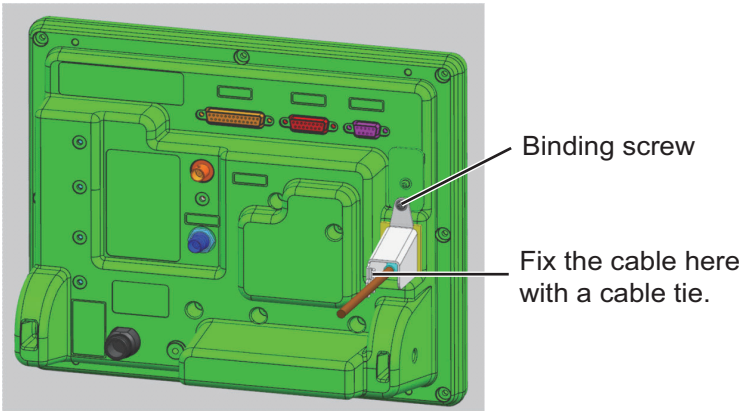

Keyboard

1. Attach the function key label (IMN-C_{18}) to the keyboard as shown below.
2. Attach four fasteners (small, supplied) to the bottom of the keyboard.
3. Attach four fasteners (large, supplied) to the small fasteners attached at step 2.
4. Remove the paper from four fasteners.
5. Fasten the keyboard to the mounting place.

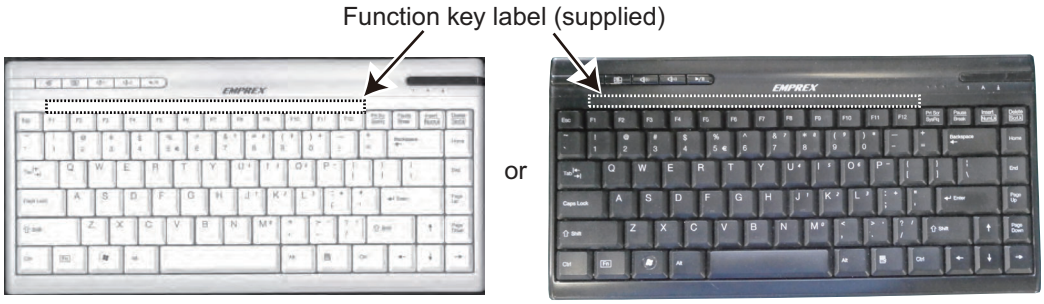

1.3 Distress Alert/Received Call Unit IC-305/Alarm Unit IC-306

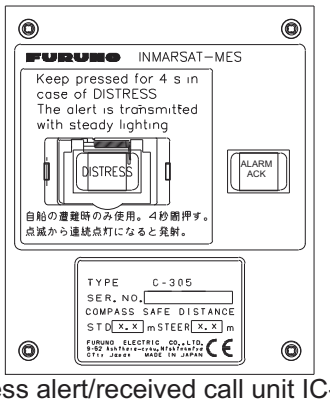

Distress alert/received call unit IC-305

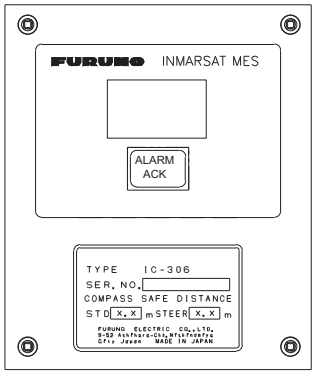

Alarm unit IC-306

Bulkhead mounting

1. Remove four screws from the unit to separate the bottom chassis from the top cover.
2. Fix the bottom chassis to the mounting location with four self-tapping screws (supplied).
3. Cable can be led in from the bottom or the rear panel. For rear panel entrance, change the clamp orientation as follows.
   1) Unfasten two screws to remove the cable clamp.
   2) Turn the clamp 90 degrees.

3) Refasten two screws removed at step 1) to fix the clamp.

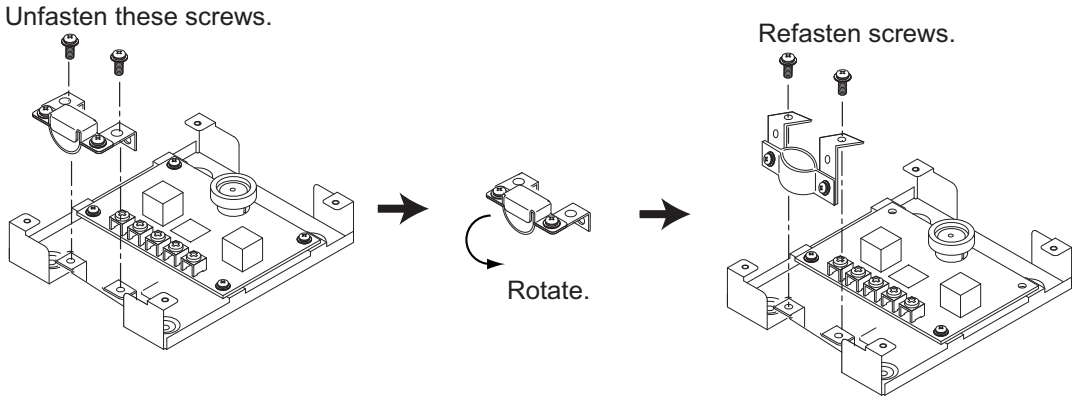

4) Run the interconnection cable thorough a cable entrance and connect it to terminal board.

Flush mount

The optional flush mounting kit OP16-27 (Code No.: 004-448-000) is required.

Name	Type	Code No.	Qty
Fixture	16-018-4201-1	100-317-841	1
Pan head screw	M3x6	000-800-362	4
Self-tapping screw	4x16	000-162-605-10	4

1. Make a cutout in the mounting location, referring to the outline drawings at the back of this manual.
2. Fix the unit to the fixture with four pan head screws (supplied).
3. Fasten four self-tapping screws (ϕ5, supplied) to fasten the fixture to the mounting position.

1.4 Printer (option)

Mount the printer (PP-510 or PP-520) on a tabletop with the fixtures supplied. Refer to the outline drawing at the end of this manual for the mounting dimensions. The right figure is for PP-520

1. Decide the location of the printer.
2. Set the ink ribbon cartridge and the roll paper to the printer.
3. Set the fixtures (left/right) onto the printer. Fasten them with four self-tapping screws (ϕ5x20).

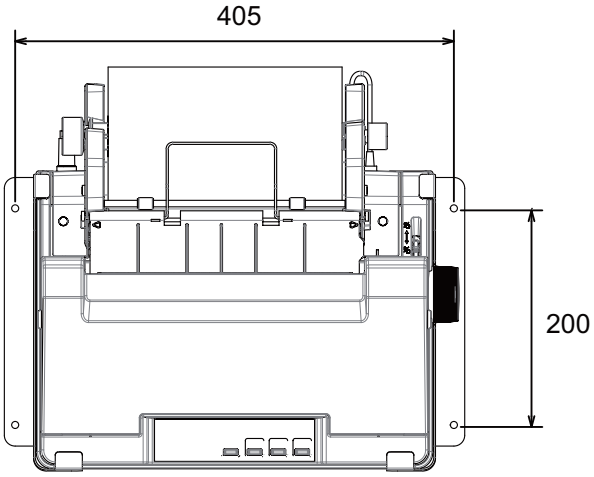

1.5 AC/DC Power Supply Unit PR-240 (option)

Fix the unit on a table with four self-tapping screws.

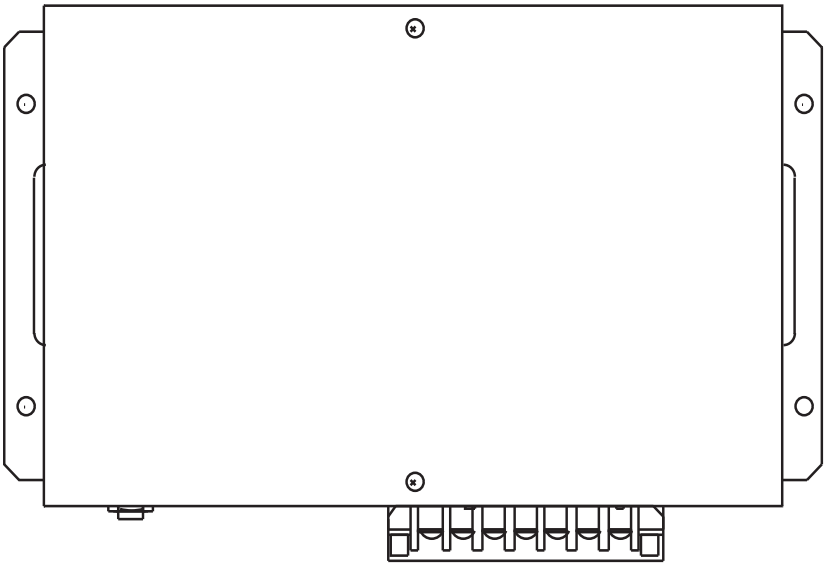

AC/DC power supply unit PR-240

1.6 Junction Box IC-318

The junction box IC-318 is connected to the terminal unit by using the cable assy 16S0344 (2 m, attached to the junction box). Install the junction box within 2 m from the terminal unit.

1. Remove four screws from the unit to separate the bottom chassis from the top chassis.
2. Fix the bottom chassis to the mounting location with four self-tapping screws (4x16, supplied).
3. Connect the cables referring to Chapter 2.

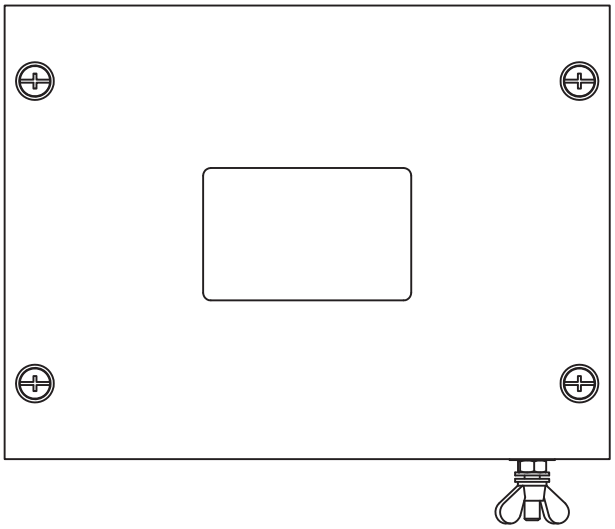

Junction box IC-318

2. WIRING

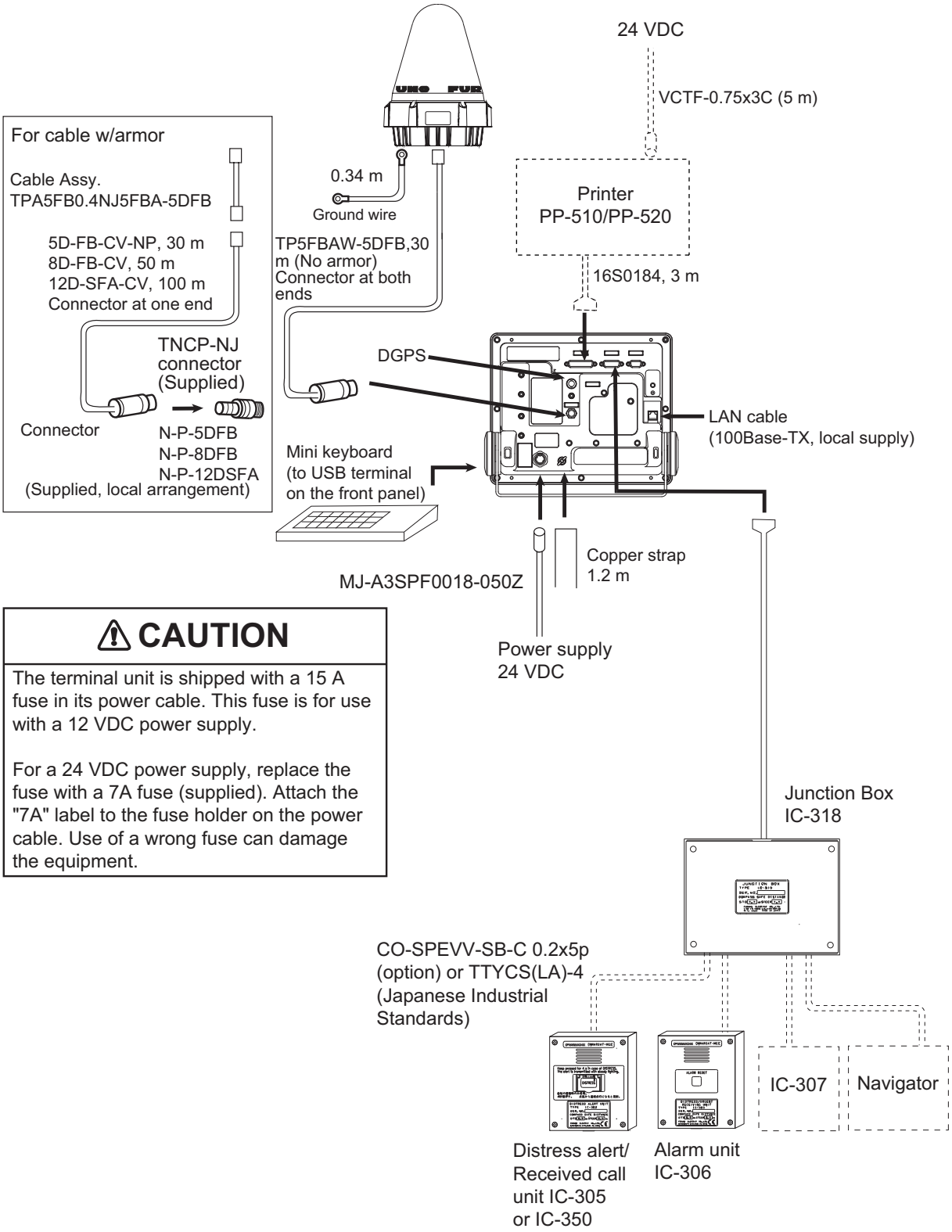

⚠ CAUTION

The terminal unit is shipped with a 15 A fuse in its power cable. This fuse is for use with a 12 VDC power supply.

For a 24 VDC power supply, replace the fuse with a 7A fuse (supplied). Attach the "7A" label to the fuse holder on the power cable. Use of a wrong fuse can damage the equipment.

Wiring of FELCOM 18

2.1 Antenna Cable Connector at the Terminal Unit

2.1.1 Antenna cable TP5FBAW-5DFB (30 m)

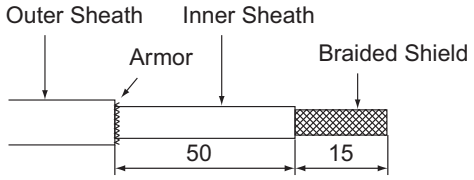

Remove the outer sheath, armor and inner-sheath by the dimensions shown.

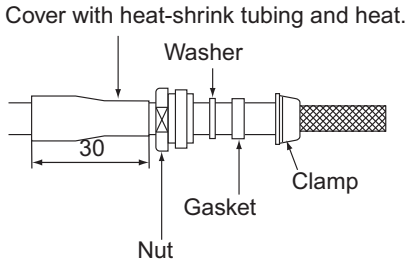

Set the nut, washer, gasket, clamp onto cable as shown.

- Be careful not to damage the braided shield.

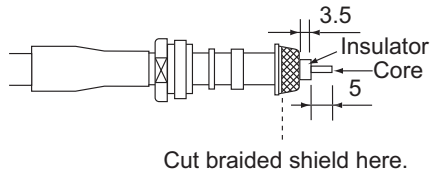

Fold back the braided shield onto the clamp and trim the shield as shown.

Make the length of insulator 3.5 mm and the length of the core 5 mm.
- Be careful not to damage the core.

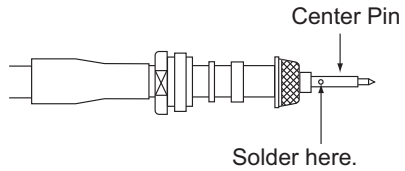

Set the center pin to the core and solder the pin from the hole in the pin.
(Pull the pin with approx. 1 kg of force to check strength of solder joint.)
- Be sure the solder is flush with surface of pin.
- Be sure there is no gap between center pin and insulator. Do not push the center pin into the insulator.
- Do the soldering as quickly as possible so as not to deform the insulator.

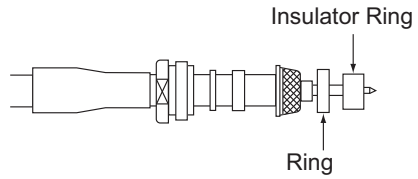

Set the ring and insulator ring onto the cable.

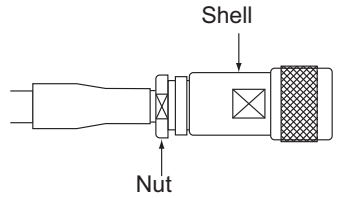

Set the shell to the cable then turn the nut to tighten. (Do not tighten by turning shell.) - Use a wrench or the like to tighten the nut securely.

How to fabricate antenna cable TP5FBAW-5DFB

2.1.2 Antenna cable 5D/8D-FB-CV (50 m)

Connector type N-P-5D-FB

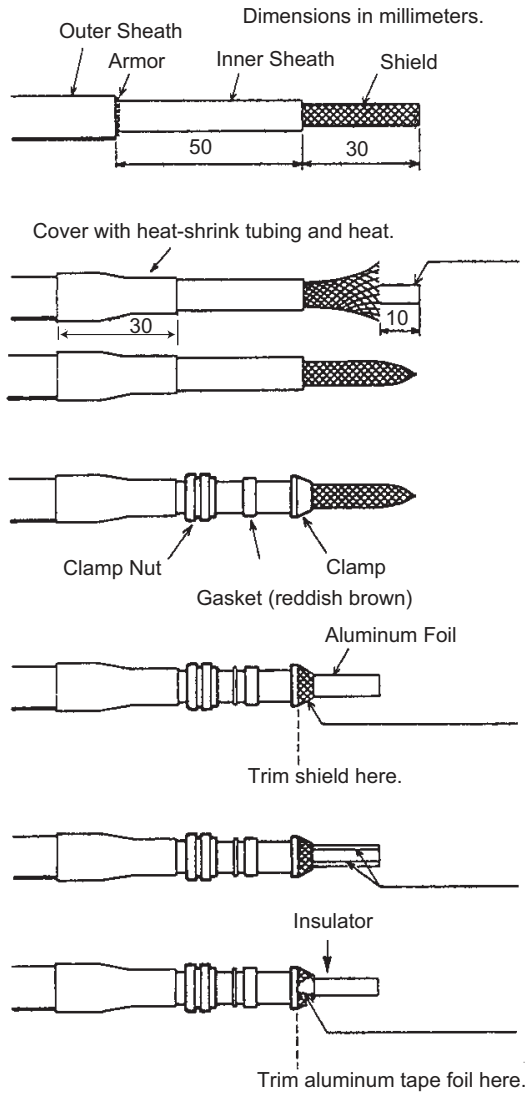

Remove outer sheath and armor by the dimensions shown left.
Expose inner sheath and shield by the dimensions shown left.

Remove insulator and core by 10 mm.

Twist shield end.

Slip on clamp nut, gasket and clamp as shown left.

Fold back shield over clamp and trim.

Cut aluminum foil at four places, 90° from one another.

Fold back aluminum tape foil onto shield and trim.

Expose the insulator by 1 mm.

Expose the insulator by 5 mm.

Slip the pin onto the conductor. Solder them together through the hole on the pin.

Insert the pin into the shell. Screw the clamp nut into the shell.
(Tighten by turning the clamp nut. Do not tighten by turning the shell.)

How to fabricate antenna cable 8D-FB-CV

Connector type N-P-8D-FB

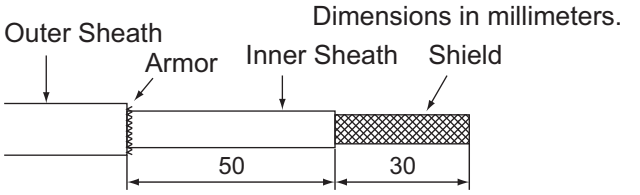

Remove outer sheath and armor by the dimensions shown left.
Expose inner sheath and shield by the dimensions shown left.

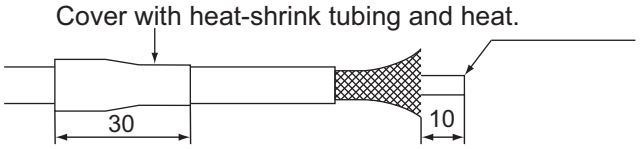

Remove insulator and core by 10 mm.

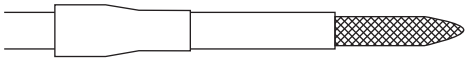

Twist shield end.

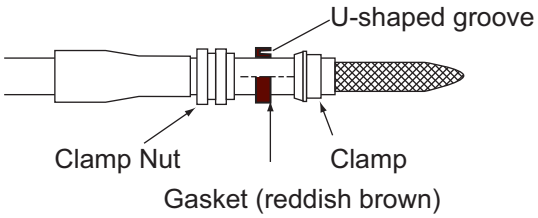

Slip on clamp nut, gasket and clamp as shown left.

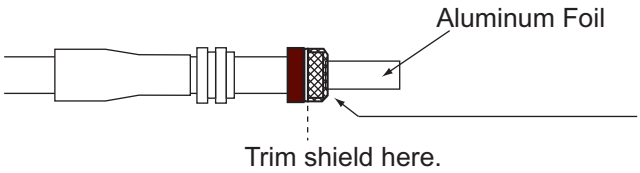

Fold back shield over clamp and trim.

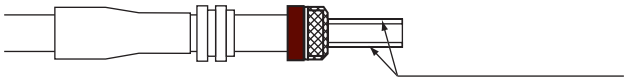

Cut alminum foil at four places, 90° from one another.

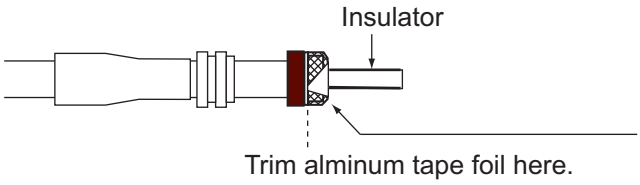

Fold back alminum tape foil onto shield and trim.

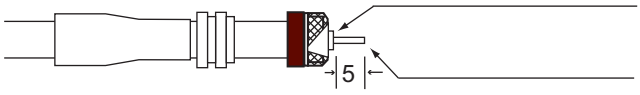

Expose the insulator by 1 mm.

Expose the core by 1 mm.

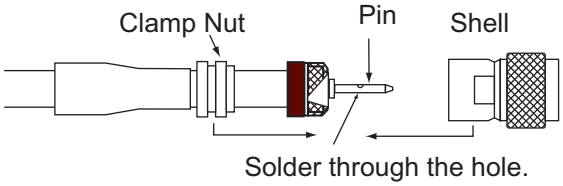

Slip the pin onto the conductor. Solder them together through the hole on the pin.

Insert the pin into the shell. Screw the clamp nut into the shell.
(Tighten by turning the clamp nut. Do not tighten by turning the shell.)

Connector type N-P-8DSFA

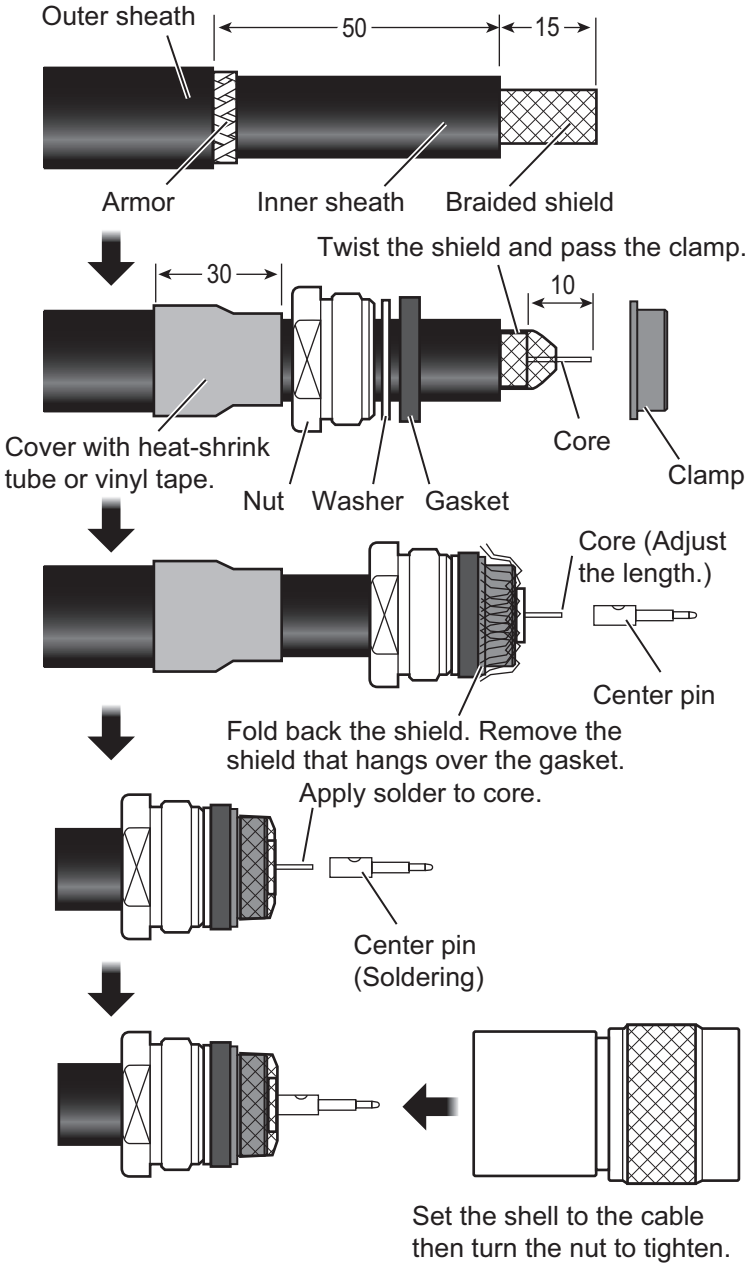

2.1.3 12D-SFA-LITE-CV (100 m)

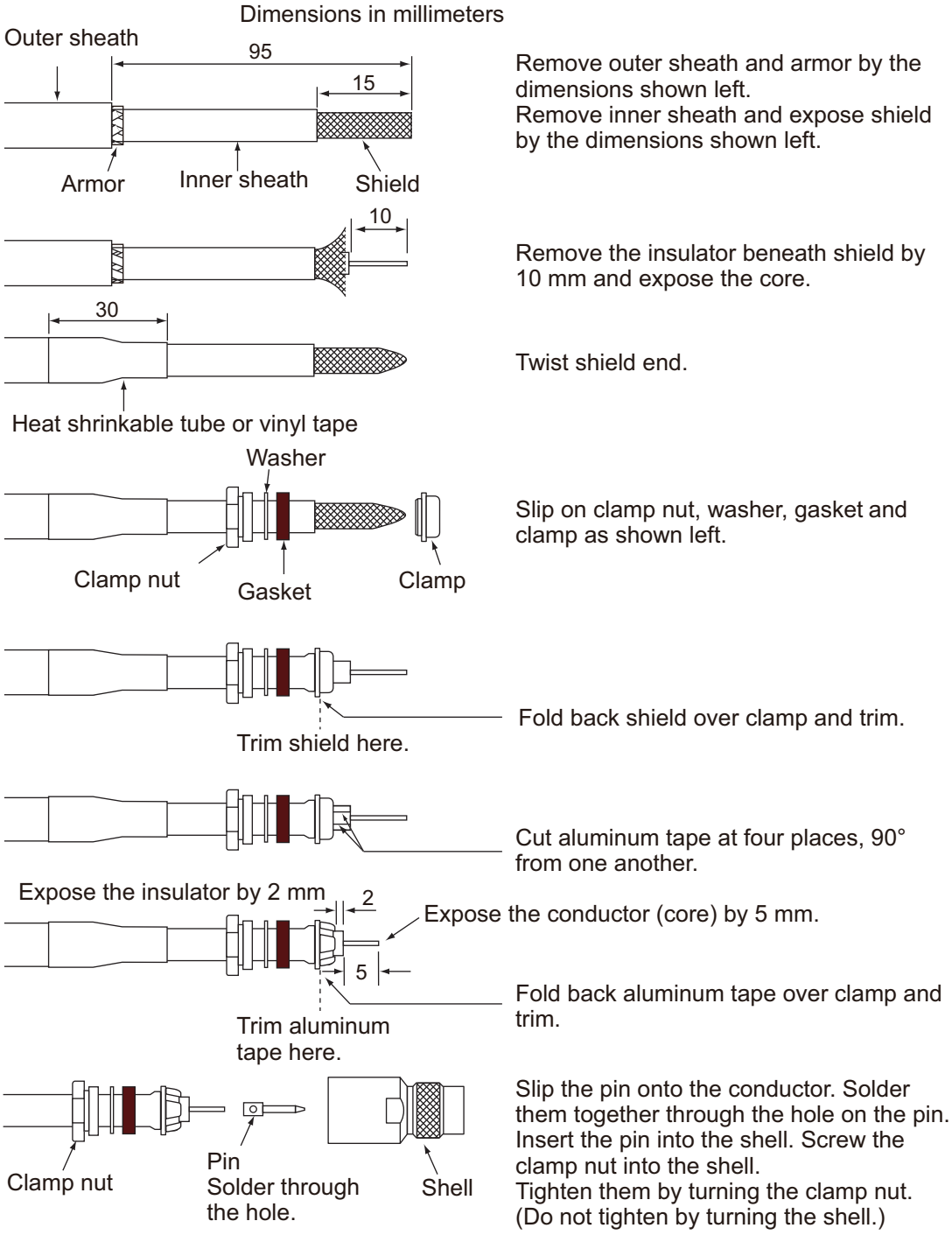

How to fabricate antenna cable 12D-SFA-LITE-CV

2.2 Distress Alert/Received Call Unit IC-305

Use the installation materials CP16-02201 to connect the IC-305. The optional CO-SPEVV-SB-C 0.2x5P cable or JIS cable (Japan Industrial Standard) TTYCS(LA)-4 or equivalent are available to connect with the junction box IC-305. Select the cable clamp attached according to the diameter of cable, and fix the armor of the cable with the clamp.

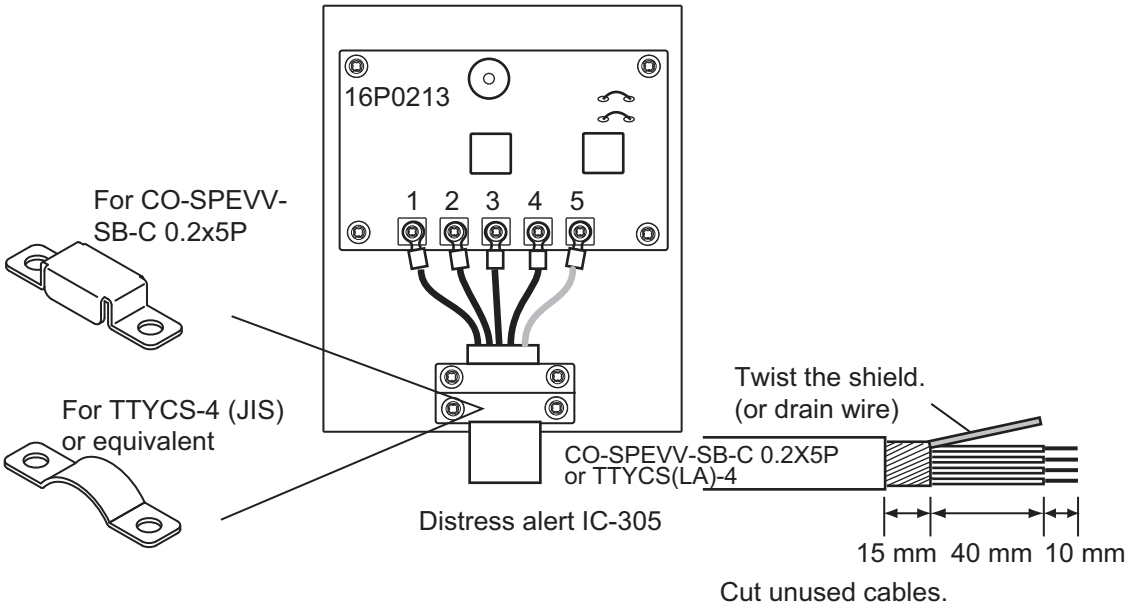

Wiring of distress alert IC-305

2.3 Alarm Unit IC-306

A maximum of three alarm units can be connected to the junction box IC-318, in parallel. To distinguish the incoming indictors, set jumper wires for the second alarm unit as shown below. For connection, refer to 2.2 Distress Alert/Received Call Unit IC-305.”

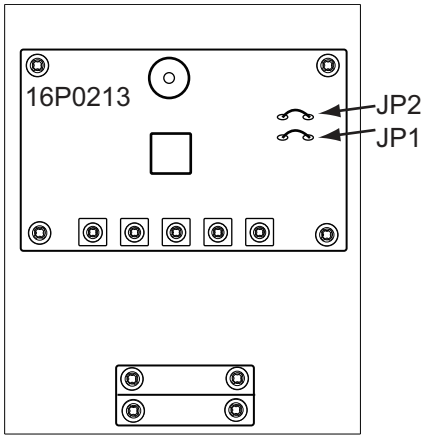

Alarm unit IC-306

	No.1 (default setting)	No.2	No.3
JP1	Open	Open	Short
JP2	Short	Open	Open

2.4 Junction Box IC-318

Use the junction box IC-318 to connect the distress alert/received call unit IC-305 and other units (max. four units) to the terminal unit. Unfasten four screws to remove the units cover to connect cables.

For connection, use the optional 5 pair cable CO-SPEVV-SB-C 0.2x5P, JIS cable (Japan Industrial Standard) TTYCS(LA)-4 or equivalent.

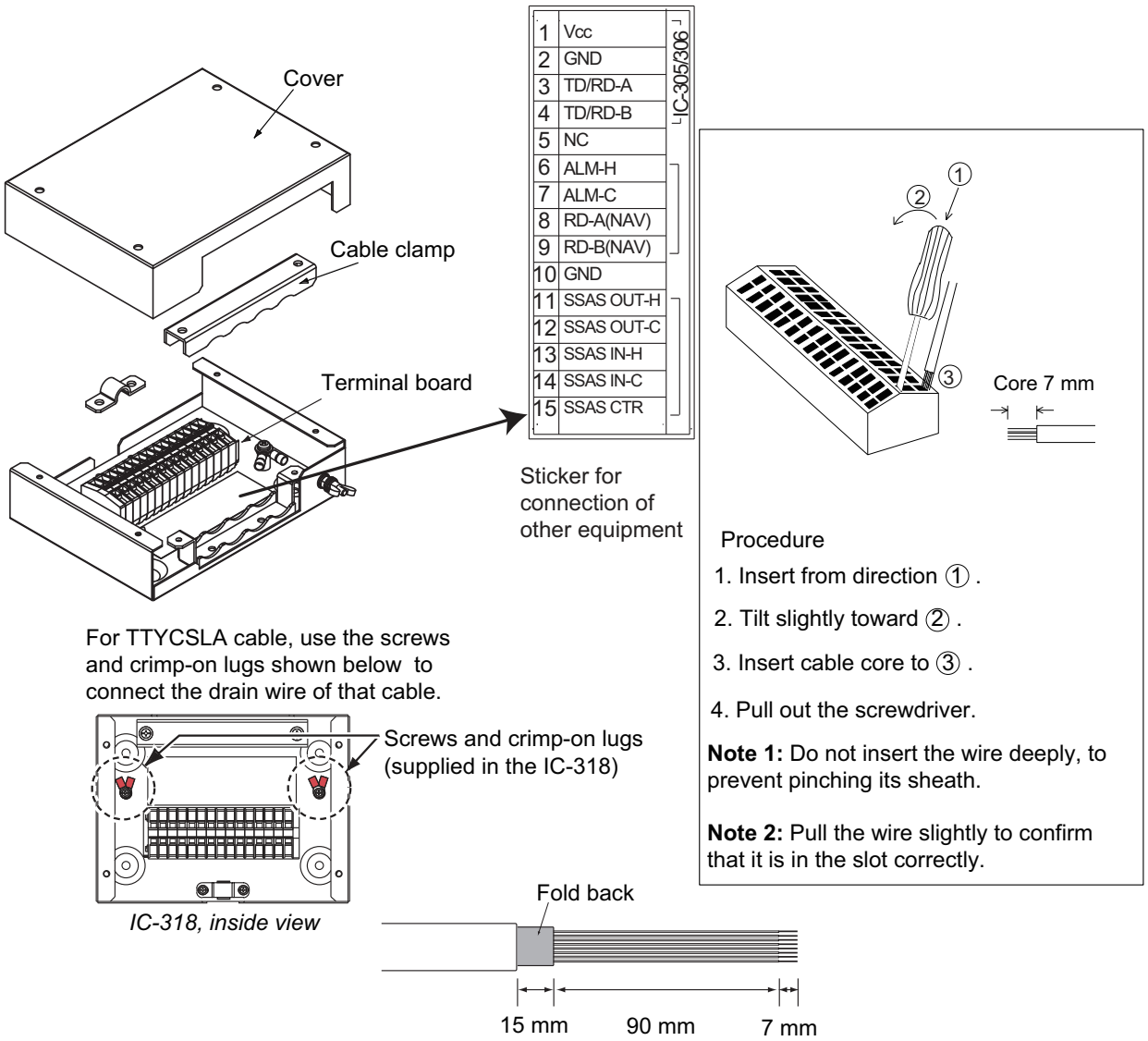

Junction Box IC-318

Input sentences

The following sentences can be input by a GPS navigator.

Input sentences
BWC, BWR, DBT, DTM, GGA, GLL, GNS, GSA, MTW, RMA, RMB, RMC, VDO, VDR, VTG, WPL, ZDA

3. INITIAL SETTINGS

This chapter shows you how to setup the equipment. Some procedures require entry of job no. and password. Ask your dealer.

3.1 How to Set the IMN (INMARSAT MOBILE NO.)

Set your IMN (Inmarsat Mobile No.) as shown below.

1. Turn the power on.
2. Press the function key [F8] to show the [Setup] menu.

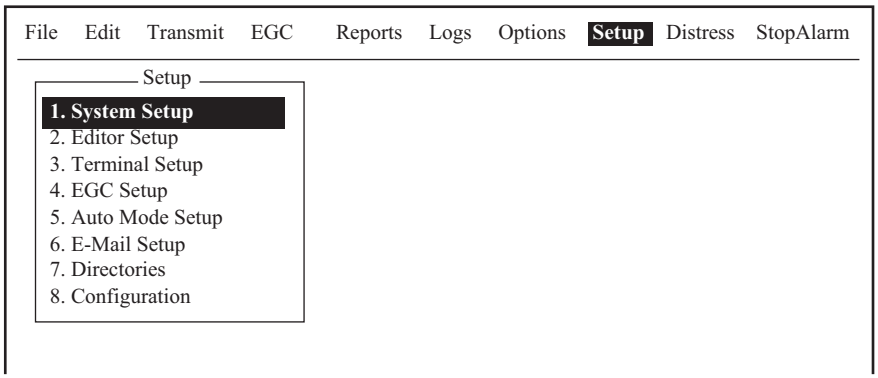

3. Press **1** key to display the [System Setup] menu.

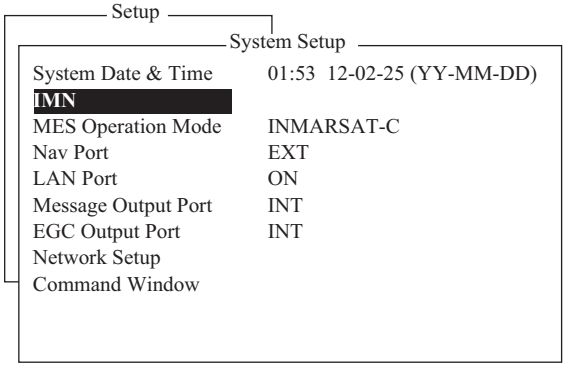

4. Confirm that [IMN] is selected, and then press the **Enter** key.
   An input box appears.
5. Key in your IMN.
6. Press the **Enter** key.
   To clear the IMN, select [IMN], then press **I**, **M**, **N** while pressing the **Alt** key. Repeat step 4 to step 6 to input the correct IMN.
7. Press the **Esc** key.
8. Press the **Enter** key.
9. Press the **Esc** key.

3.2 How to Set External Equipment

The FELCOM 18 is set at the factory to accept the distress alert/received call unit IC-305, up to three alarm units IC-306 and the SSAS alert unit IC-307. If the configuration is different, change the setting to OFF as below.

1. Press the **F8** key to show the [Setup] menu.
2. Press the **1** key to show the [System Setup] menu.
3. Press the ↓ key to select [Command Window], and then press **Enter** key to show the [Command Window] screen.
4. Enter the [Enter JOB No.:], and then press the **Enter** key.
5. Enter the [PASSWORD:], and then press the **Enter** key.
   [Main Menu] is highlighted.
6. Press the **1** and **Enter** keys in order.

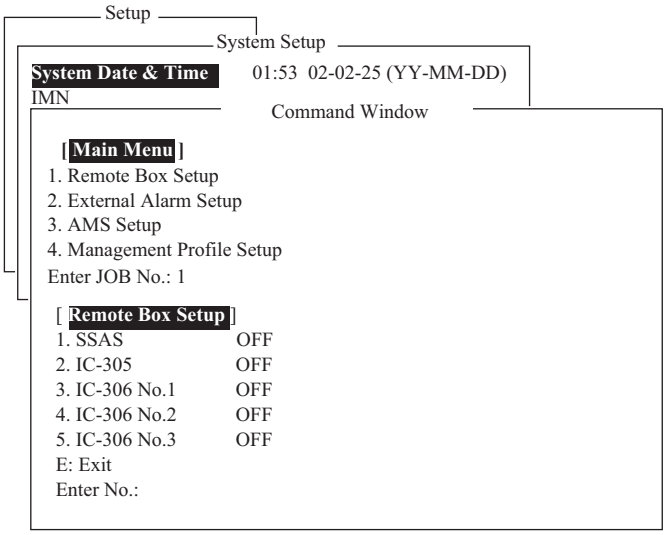

Command Window screen

7. Press the number key for unit not connected.
   For example, press the **1** and **Enter** keys when the SSAS alert unit IC-307 is not connected.

Setting window for IC-307

8. If the unit is not connected, press the **1** key, and the **Enter** key.
   To return to the [Remote Box Setup] menu, press the **E** key (not any numeric key).
9. Repeat step 7 to step 8 for other units not connected.
10. Press the **Esc** key several times to close the menu.

3.3 How to Set the Alarm Contact

1. Press the **F8** and **1** keys to show the [System Setup] menu.
2. Press ↓ to select [Command Window], and then press the **Enter** key.
3. Enter the [Enter JOB No.:], then press the **Enter** key.
4. Enter the [PASSWORD:], and then press the **Enter** key.
   [Main Menu] is highlighted.
5. Press the **2** key, and the **Enter** key.

```
Command Window

[ External Alarm Setup ]
1. Distress Message : ON
2. Distress EGC     : ON
3. Urgent EGC       : ON
4. Unit Fault       : OFF
E: Exit

Enter No.:
```

6. Press a numeric key (1 to 4), then press the **Enter** key.
   To detect the error on a unit, press **4** and **Enter** in order.

```
----------------------
[ Unit Fault ]
1. ON
2. OFF    E: Exit
----------------------
```

7. Press the **1**, and **Enter** keys.
   To return to the [External Alarm Setup] menu, press the **E** key.
8. Repeat steps 6 and 7 to set other alarm contacts.
9. Press the **Esc** key several times to close the menu.

3.4 How to Set up the AMS/BAM

Do the following to connect the AMS (Alert Management System).

1. Press the **F8** and **1** keys to show the [System Setup] menu.
2. Press ↓ to select [Command Window], and then press the **Enter** key.
3. Enter the [Enter JOB No.:], then press the **Enter** key.
4. Enter the [PASSWORD:], then press the **Enter** key.
5. Press the **3** key, and the **Enter** key.

```
Command Window

[ AMS Setup Menu ]
1. Mode Setup
2. MY SFI Setup
3. Transmission Group Setup
4. Error Log
E: Exit

Enter JOB No.:
```

6. Press appropriate numeric key (1 to 4), then press the **Enter** key.
   To return to the [AMS Setup Menu], press the **E** key at the setting window.

1 key: [Mode Setup]

Set the alert mode.
[Legacy]: Select when no AMS/BAM is connected.
[AlertIF1]: Select when AMS is connected.
[AlertIF2]: Select when BAM is connected.

```
Command Window
[ Mode Setup ]
1. Legacy        ON
2. AlertIF1
3. AlertIF2
E: Exit
Enter AMS Mode No.:
```

For [AlertIF1], the option window shown to the right is displayed. To return to the [AMS Setup Menu] from this window, press the **E** key twice.

```
Command Window
[ Mode Setup ]
1.
2.
E:
En
Command Window
[ AlertIF1 Option ]
1. Distress Alarm Stop Enable
2. Distress Alarm Stop Disable    ON
E: Exit
Enter AlertIF1 Option No.:
```

[Distress Alarm Stop Enable]: The AMS can stop the alarm sound when the Distress Priority message is received.
[Distress Alarm Stop Disable]: The AMS can not stop the alarm sound when a Distress Priority message is received.

For [AlertIF2], the option window shown to the right is displayed. To return to the [AMS Setup Menu] from this window, press the **E** key twice.

Select the appropriate BAM unit to setup.

```
Command Window
[ Mode Setup ]
1.
2.
3.
E:
En
Command Window
[ AlertIF2 Setup ]
1. BAM SFI1    XX9999
2. BAM SFI2    XX9999
E: Exit
Enter AlertIF2 Option No.:
```

The [AlertIF2 Setup] option window shown to the right is displayed.

Set the SFI for the connected BAM unit.

```
Command Window
[ Mode Setup ]
1.
2.
3.
E:
En
Command Window
[ AlertIF2 Option ]
1. B
2. B
E: E
Ent
Command Window
[ BAM SFI Setup ]
SFI1      XX9999

E: Exit      C: Clear
Enter SFI:
```

2 key: [MY SFI Setup]

Set this FELCOM's SFI number, which is the four-digit number that follows "CS". (The setting range is 0001 to 9998.)

Note: Be sure to use an SFI not used by other devices in the shipboard network.

```
Command Window
[ MY SFI Setup ]
SFI              CS0001

Set SFI not used for other equipment.
0001 to 9998: SFI No.
E: Exit
Enter SFI No.:
```

3 key: [Transmission Group Setup]

Set the AMS Transmission Group.

```
Command Window
[ Transmission Group Setup ]
1. MISC        ON
2. TGTD
3. SATD
4. NAVD
5. VDRD
6. RCOM
7. TIME
8. PROP
9. USR
E: Exit
Enter Group No:
```

Transmission Group	Multicast Address	Destination Port
MISC	239.192.0.1	60001
TGTD	239.192.0.2	60002
SATD	239.192.0.3	60003
NAVD	239.192.0.4	60004
VDRD	239.192.0.5	60005
RCOM	239.192.0.6	60006
TIME	239.192.0.7	60007
PROP	239.192.0.8	60008
USR1 to USR8	239.192.0.9 to 239.192.0.16	60009 to 60016

4 key: [Error Log]

The [Error Log] compiles AMS related errors. To delete an error log entry, select the log then press the **1**, **Enter** key.

The error log holds 4294967296 entries. When that count is reached, the message "LIMIT MAX" appears.

```
Command Window
[ Error Log ]
Datagram header error        xxxxxxxxxx*
TAG block formatting error   xxxxxxxxxx
TAG checksum error           xxxxxxxxxx
TAG syntax error             xxxxxxxxxx
TAG framing error            xxxxxxxxxx
Sentence syntax error        xxxxxxxxxx
UDP checksum error           xxxxxxxxxx
Total                        4294967295    LIMIT MAX

1. Log Clear
E: Exit
Enter JOB No.:
```

*: xxxxxxxxxx: Error log count

7. Press the **Esc** key several times to close the menu.

3.5 How to Select Position-fixing Equipment

Select the position-fixing equipment that is to feed navigation data to the FELCOM.

1. Press the **F8** and **1** keys to show the [System Setup] menu.
2. Select [NAV Port] then press the **Enter** key.
3. Select the navigator to use, then press the **Enter** key.
   OFF: Manually input the position of own ship. Alarm is outputted when the position data is not updated every four hours.
   Auto: INT or EXT is automatically selected. For SSAS Russia and LRIT Russia, the setting of [NAV Port] is fixed at Auto and GLONASS is prioritized.
   INT: Use the navigator that is built into the terminal unit.
   EXT: Use an external navigator.
4. Press the **Esc** key several times to close the menu. The [Update] window appears.
5. Select [Yes] then press the **Enter** key.

3.6 How to Set up for 2nd DTE

For a 2nd DTE, do the procedure shown below.

1. Press the **F8** and **3** keys to show the [Terminal Setup] menu.

Terminal Setup

Connection	
Date Disp. Form	YY-MM-DD
Screen Saver	OFF
Window Color	
Window Size	Normal

Terminal Setup menu (for 2nd DTE)

2. [Connection] shows the name of the terminals available for connection to the LAN interface. Press the **Enter** key to show the [Connect List].

Connect List

No.	Name	IMN	IP Address	Software Version
*01	F18_123456	123432588	172.31.16.100/24	1650247-01
02	F18_133234	456789210	192.168.16.11/24	1650247-01
03				
04				
05				
06				
07				
08				
09				
10				

   The No., Name, IMN, IP address and software version of each terminal are shown. The asterisk marks the terminal currently selected for communication.
3. To connect to a different terminal, select it then press the **Enter** key. The [Connect] window appears and [Yes] is selected. Press the **Enter** key to connect the terminal.

3.7 How to Set the Russian Language

Do the following to create a message in Russian.

1. Press the **F8** and **1** keys to show the [System Setup] menu.
2. Press ↓ to select [Command Window], and then press the **Enter** key.
3. Type "RUSSIAN ON" in the [Enter JOB No.:], then press the **Enter** key.
   The language is switched to Russian and the message "Russian supported." appears at the bottom of the standby display.
   To restore the previously used language, type "RUSSIAN OFF" in the [Enter JOB No.:], then press the **Enter** key. "Russian supported." disappears from the screen.

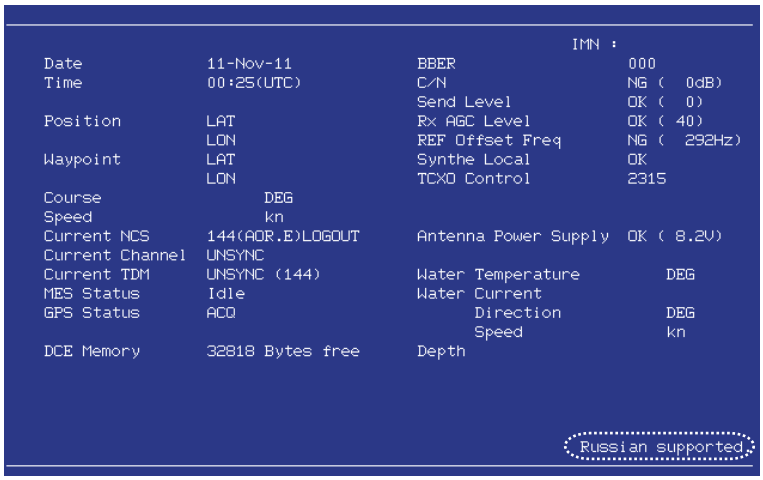

4. Press and hold down the left **Shift** key while pressing the left **Alt** key.
   The language for the keyboard is switched from English to Russian. The Scroll Lock lamp lights when Russian is selected. To switch the language from Russian to English, press and hold down the left **Shift** key while pressing the left **Alt** key.
   Note: With a 2nd DTE, Russian can be input from the keyboard of your PC. See your PC's owner's manual for how to switch languages.
5. Put the key template for Russian (OP05-135) on the keyboard of your PC.

3.8 How to Use the Paper Save Function

The Paper Save function allows you to choose whether to print the "Successful Data Report Sending" confirmation after a data report is sent.

1. Press the **F8** and **1** keys to show the [System Setup] menu.
2. Press ↓ to select [Command Window], and then press the **Enter** key.
3. At the [Enter JOB No.:] prompt, type "Paper Save", then press the **Enter** key. A message is displayed showing the status of the Paper Save function (ON or OFF).
4. To change the setting, type "Paper Save ON" (No report is printed) or "Paper Save OFF" (Report is printed), as appropriate, then press the **Enter** key.

3.9 How to Output EGC Messages

The FELCOM can output EGC messages to a navigation device (via the FELCOM's LAN port) that can receive EGC messages.

The output messages, in IEC 61162 format, are SM1, SM2, SM3, SM4, and SMB.

1. Press the **F8** and **1** keys to open the [System Setup] menu.
2. Select [EGC Output Port] then press the **Enter** key.
3. Select [LAN] or [INT+LAN] as appropriate, then press the **Enter** key.
   [INT]: Output EGC messages to the main terminal.
   [LAN]: Output EGC messages to the sub terminal or other navigation device connected to the LAN Port on the main terminal.
   Note: When [LAN] is selected, the main terminal does not print and display EGC messages with priority other than urgent or distress.
   [INT+LAN]: Output EGC messages to the main terminal, sub terminal and other navigation device.

4. HOW TO INSTALL OPTIONAL EQUIPMENT

4.1 GPS Board OP16-62

This chapter provides the procedure for the installation of the GPS board (in the terminal unit), which provides GPS position information.

Name: GPS board
Type: OP16-62
Code No.: 001-180-100

Name	Type	Code No.	Qty
Binding Screw	M3x6	000-163-479-10	3
GPS Board	16P0246	004-656-550	1
Connector Assy.	51065-0700-PHR7-L110	000-176-305-10	1

Note: Use anti-static gloves to handle board.

1. Unfasten 18 screws, six spacers and three nuts to remove the terminal unit cover.

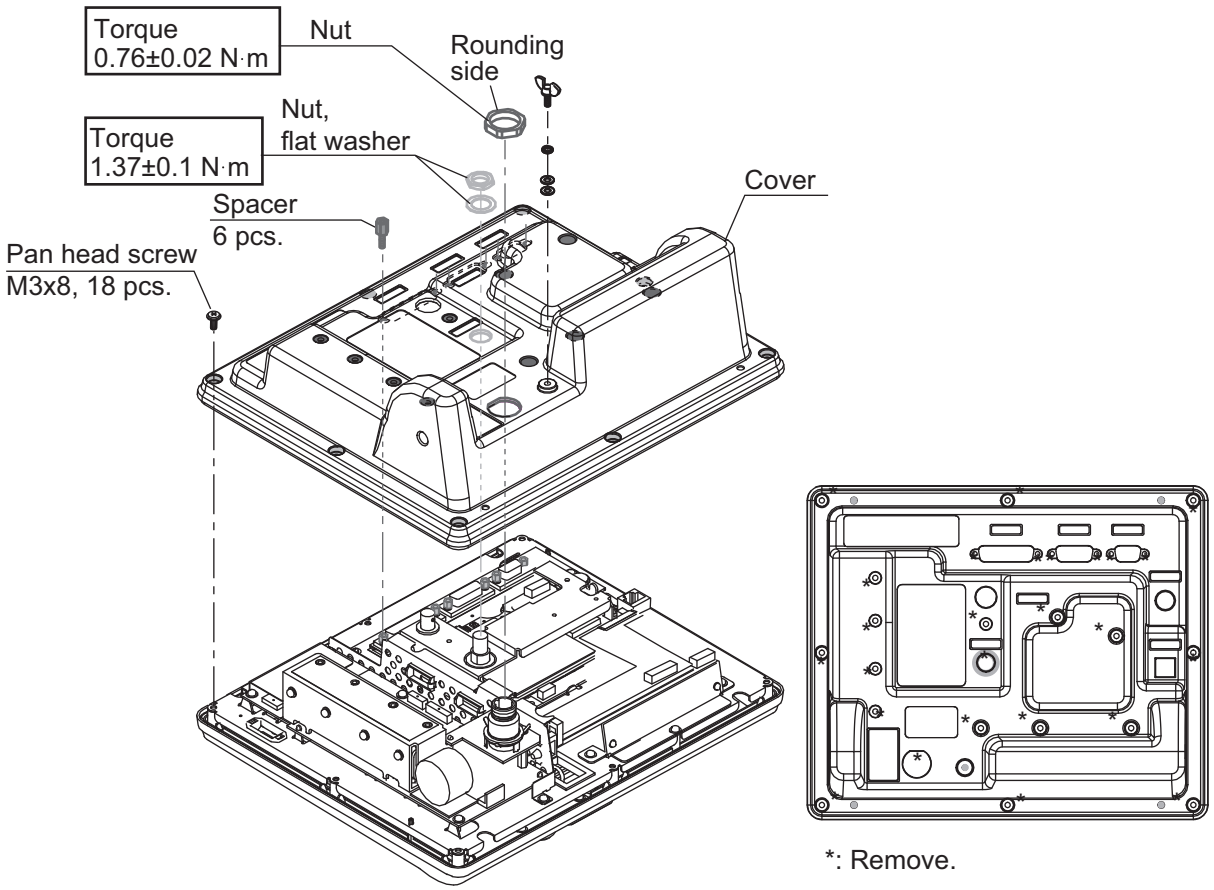

*: Remove.

2. Fasten three binding screws (M3x6, supplied with the kit) to attach the GPS Board to the RF cover.

3. Attach the 51065-0700-PHR7-L110 connector assy. between J13 on the TER-MCPU Board and J1 on the GPS board.

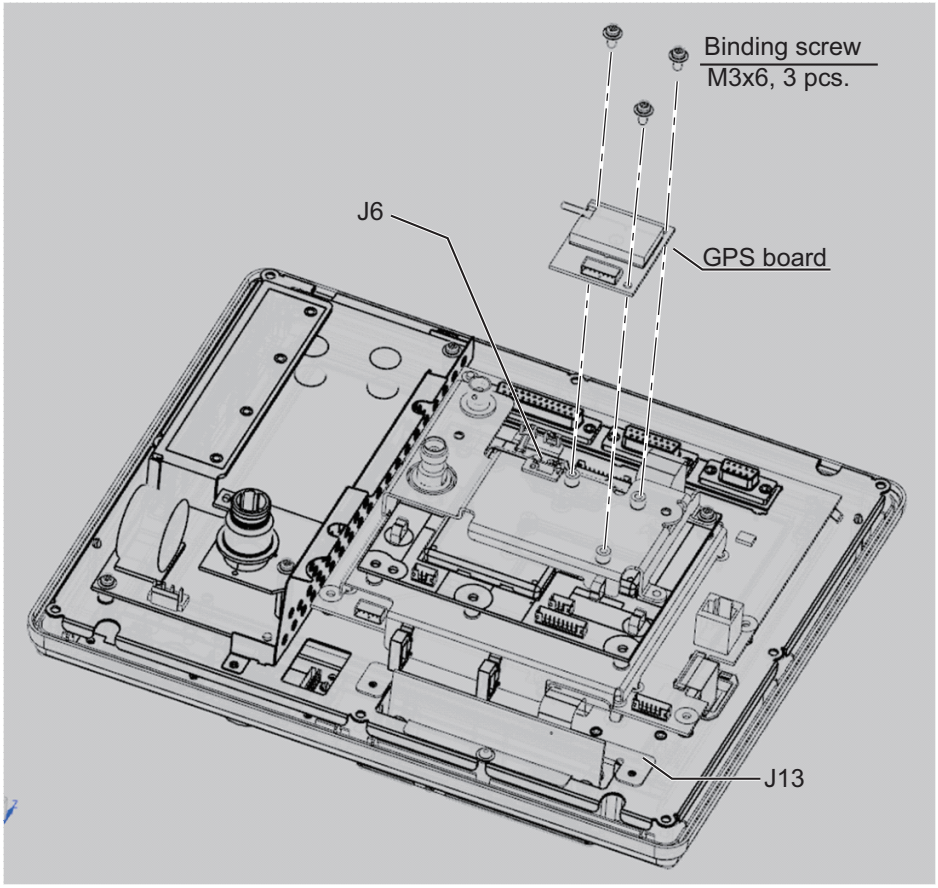

4. Attach the cable from the GPS board to J6 on the RF COMMCPU Board. Use the clamp next to the connector to fix the cable.
5. Reassemble the terminal unit.

4.2 IPX2 Kit OP16-58/OP16-59

The optional kits OP16-58 and OP16-59 are used to protect the connectors on the terminal unit from water splash. Note that these optional kits should be used as a pair.

4.2.1 OP16-58 (cables)

Connect the waterproofed D-sub cables to the rear of the terminal unit, instead of the standard supply cable. For the connection at the IC-318, see section 4.3.

OP16-58 (Code No.: 001-180-070)

Name	Type	Code No.	Qty
Cable Assy.	H230817-1	001-176-552-10	1
	H230817-2	000-176-553-10	1
	XM-FD-361	000-176-551-10	1

4.2.2 OP16-59 (for connector ports)

OP16-59 (001-180-080)

Name	Type	Code No.	Qty
Sponge for Dsub	16-023-3531	100-369-600-10	1
Cover for BNC	16-023-3534	100-369-630-10	1
Cover for USB	16-023-3535	100-369-641-10	1
USB Support	16-023-3536	100-369-650-10	1
Sponge for BNCR	16-023-3541	100-369-690-10	1
Dummy Plate 9P	16-023-3542	100-368-190-10	1
Dummy Plate 15P	16-023-3543	100-369-700-10	1
Dummy Plate 25P	16-023-3544	100-369-710-10	1
Binding Screw	#4-40UNCX3/16	000-176-619-10	6

USB port

①

Attach the cover for USB (16-023-3535) to the USB connector, then connect it to the terminal unit.

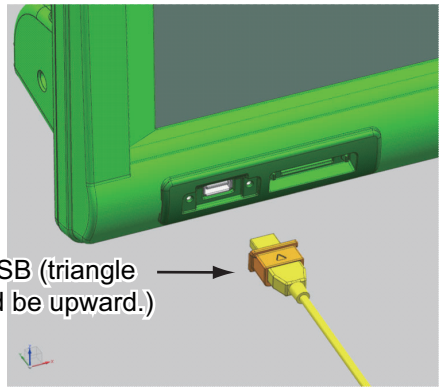

②

Fasten two binding screws (pre-attached) to fix the USB support (16-023-3536) as shown right.

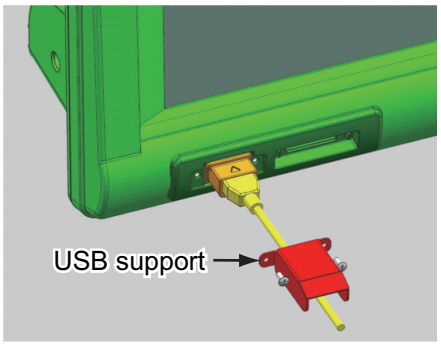

D-sub ports

①

Peel the paper from the sponge for Dsub (16-023-3531), then attach the sponge to the D-sub connectors at the rear of the terminal unit.

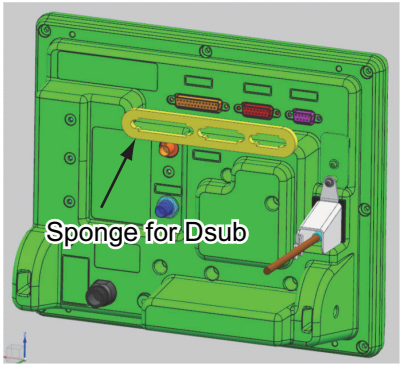

② (Cables connected)

Connect the cables supplied with OP16-58 to the appropriate ports.

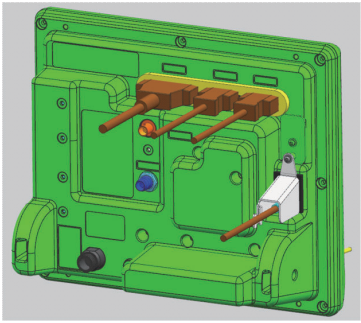

(No cables connected)

Use the binding screws (#4-40UNCx3/16) to fix the dummy plates (for 9P, 15P and 25P) to the appropriate ports.

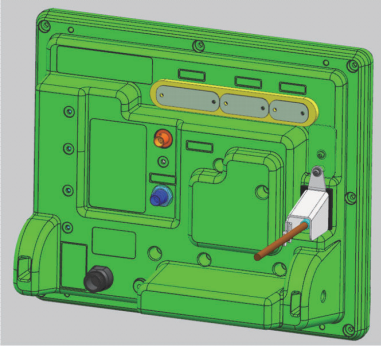

DGPS port

(Coaxial cable connected)

①

Pass the coaxial cable through the slit on the cover for BNC (16-023-3534).

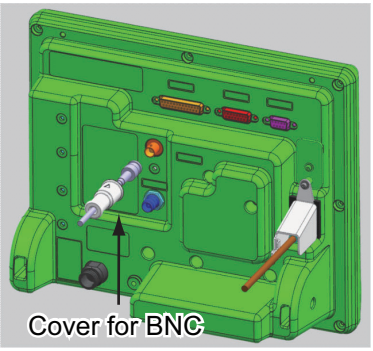

②

Attach the connector* of the coaxial cable to the DGPS port.

*For waterproofing, use the connector assy. shown below:
-BNCP-58U-BNCP L-200
(000-161-953-11)
-BNCP-58U-BNCP L-290
(000-175-274-11)

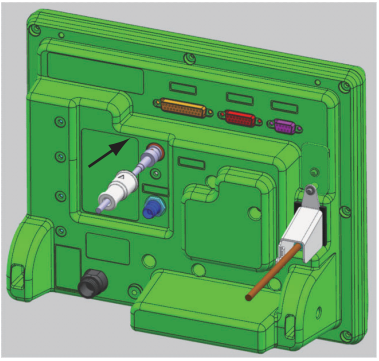

③

Slide the cover for BNC on the connector to cover the connector. Confirm that the triangle mark on the cover is upward.

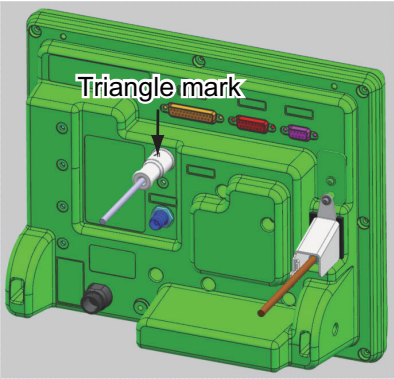

(Coaxial cable not connected)

①

Remove the cap from the DGPS port, then atttach the sponge for BNCR (16-023-3541) around the port.

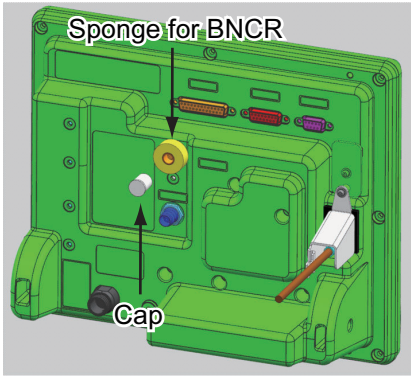

②

Re-attach the cap to the DGPS port.

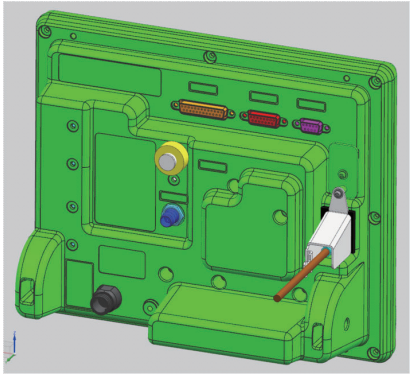

4.3 Waterproofing Kit OP16-60/OP16-67/OP16-68

You can use the optional waterproof kits to keep water splash out of the unit. Note that each kit is specifically designed for each unit.

OP16-60 (for IC-318)

The IC-318 should be installed on a desktop. To ensure the waterproof rating is maintained, use the optional waterproofing kit OP16-60. If a floor installation is required, make sure the area is not subject to water splash, rain or other water ingress.

OP16-60 (Code No.: 001-180-090)

Name	Type	Code No.	Qty
Cover gasket	16-023-5502	100-373-530-10	1
Grommet	16-023-5503	100-373-541-10	1

When the OP16-58 (described in paragraph 4.2.1) is used, replace the cable from the IC-318 with the XM-FD-361 as shown below.

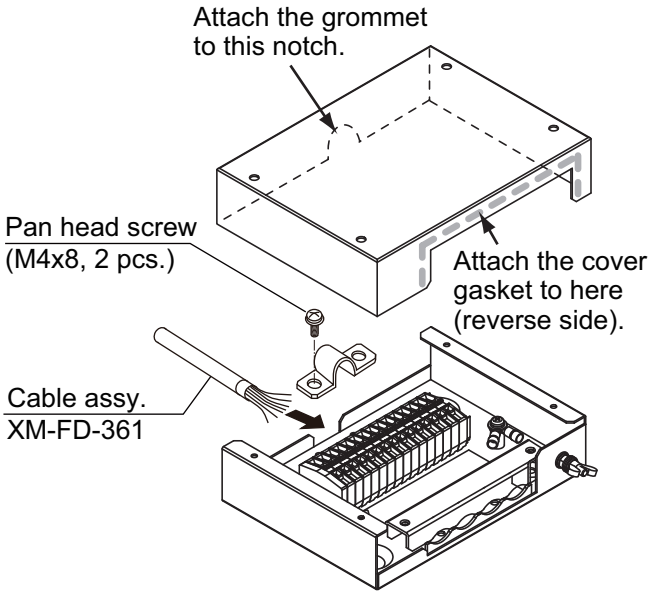

#	Color
1	Blue
2	Brown
3	Purple
4	Gray
5	-
6	Green
7	Yellow
8	Orange
9	Pink
10	Light-green
11	White (w/black dots)
12	White (w/red dots)
13	Black
14	Red
15	Light-blue

OP16-67 (for IC-305), OP16-68 (for IC-307)

Note: To maintain the waterproofing, these units must be installed on a bulkhead or wall, with the cable entry facing downwards. Further, the optional kits do not provide waterproofing if the unit is installed with the cable entry facing upwards.

OP16-67 (Code No.: 001-189-380)

Name	Type	Code No.	Qty
Fixing Tape	24-009-1225	100-366-200-10	2

OP16-68 (Code No.: 001-189-400)

Name	Type	Code No.	Qty
Waterproofing Cover	16-023-5501	100-374-950-10	1
Fixing Tape	24-009-1225	100-366-200-10	2

1. Unfasten four screws to remove cover of IC-305/IC-307.
2. Attach supplied fixing tape to the underside of the cover as shown in the illustration below.

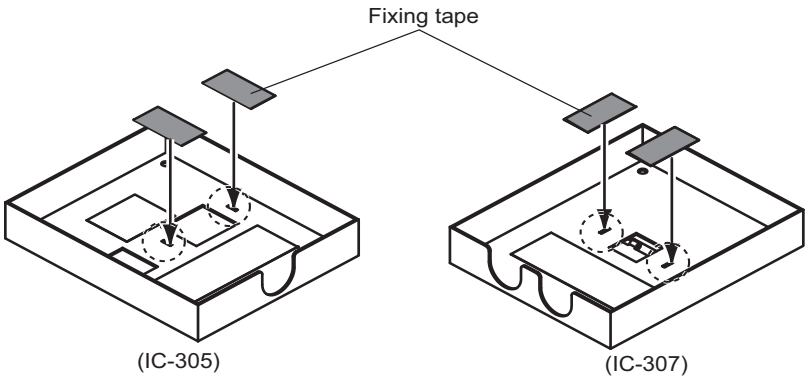

3. Attach the cover.
4. For IC-307, remove the seal from the waterproofing cover and attach the cover as shown in the illustration below.

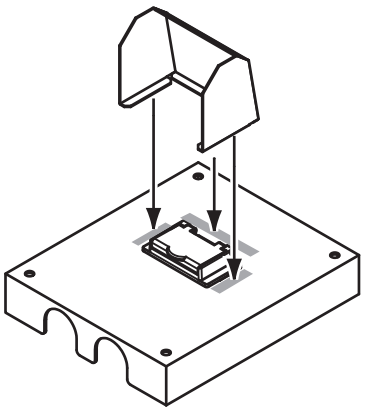

5. HOW TO CHANGE POWER SUPPLY SPECIFICATIONS

The AC-DC power supply PR-240 is shipped ready for connection to a 200-230 VAC ship's mains. If the ship' mains is 100 VAC, change the tap connection and terminal board connection as below. Attach a label supplied as accessories to the front panel according to the ship's mains.

Ship's mains	Tap connection	Terminal board	Label
200 to 230 VAC	SEL 230 V	Below (a)	200-230 VAC, 2.2-1.7 A, 1ϕ 50/60 Hz
100 to 115 VAC	SEL 115 V	Below (b)	100-115 VAC, 3.2-2.6 A, 1ϕ 50/60 Hz

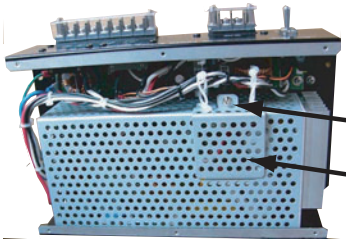

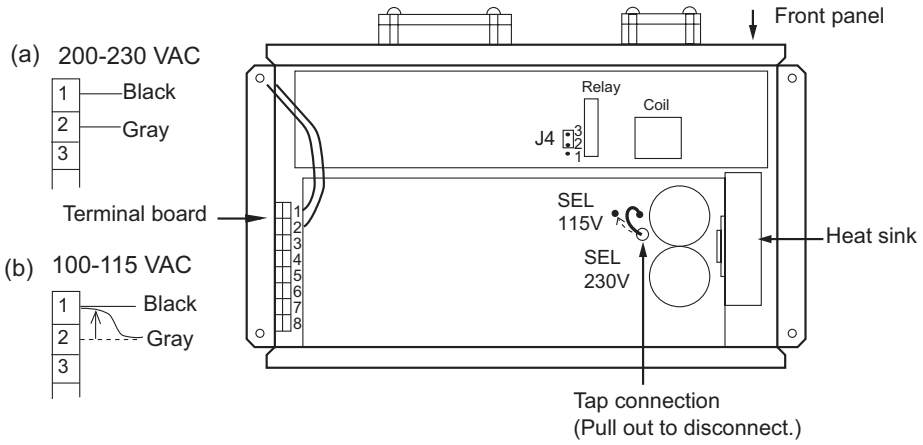

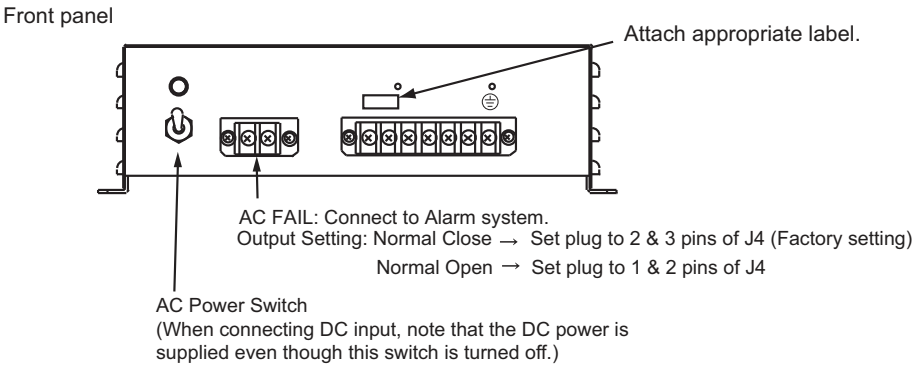

Note: The DC output load must be less than 8 A.

This page is intentionally left blank.

APPENDIX 1 JIS CABLE GUIDE

Cables listed in the manual are usually shown as Japanese Industrial Standard (JIS). Use the following guide to locate an equivalent cable locally.

JIS cable names may have up to 6 alphabetical characters, followed by a dash and a numerical value (example: DPYC-2.5).
For core types D and T, the numerical designation indicates the *cross-sectional Area (mm^2)* of the core wire(s) in the cable.
For core types M and TT, the numerical designation indicates the *number of core wires* in the cable.

1. Core Type

D: Double core power line
T: Triple core power line
M: Multi core
TT: Twisted pair communications (1Q=quad cable)

2. Insulation Type

P: Ethylene Propylene Rubber

3. Sheath Type

Y: PVC (Vinyl)

4. Armor Type

C: Steel

5. Sheath Type

Y: Anticorrosive vinyl sheath

6. Shielding Type

S: All cores in one sheath
-S: Indivisually sheathed cores
SLA: All cores in one shield, plastic tape w/aluminum tape
-SLA: Individually shielded cores, plastic tape w/aluminum tape

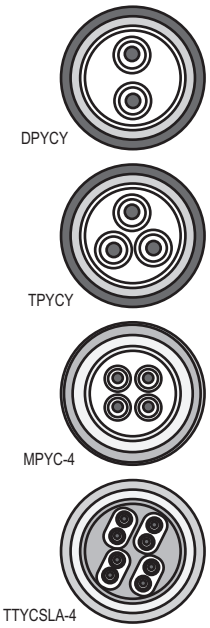

1 2 3 4 5 6
EX: TTYCYSLA - 4
Designation type — Core Area (mm^2)

1 2 3 4
MPYC - 4
Designation type — # of cores

The following reference table lists gives the measurements of JIS cables commonly used with Furuno products:

Type	Core Area	Core Diameter	Cable Diameter	Type	Core Area	Core Diameter	Cable Diameter
DPYC-1.5	1.5mm^2	1.56mm	11.7mm	TTYCS-1	0.75mm^2	1.11mm	10.1mm
DPYC-2.5	2.5mm^2	2.01mm	12.8mm	TTYCS-1T	0.75mm^2	1.11mm	10.6mm
DPYC-4	4.0mm^2	2.55mm	13.9mm	TTYCS-1Q	0.75mm^2	1.11mm	11.3mm
DPYC-6	6.0mm^2	3.12mm	15.2mm	TTYCS-4	0.75mm^2	1.11mm	16.3mm
DPYC-10	10.0mm^2	4.05mm	17.1mm	TTYCSLA-1	0.75mm^2	1.11mm	9.4mm
DPYCY-1.5	1.5mm^2	1.56mm	13.7mm	TTYCSLA-1T	0.75mm^2	1.11mm	10.1mm
DPYCY-2.5	2.5mm^2	2.01mm	14.8mm	TTYCSLA-1Q	0.75mm^2	1.11mm	10.8mm
DPYCY-4	4.0mm^2	2.55mm	15.9mm	TTYCSLA-4	0.75mm^2	1.11mm	15.7mm
MPYC-2	1.0mm^2	1.29mm	10.0mm	TTYCY-1	0.75mm^2	1.11mm	11.0mm
MPYC-4	1.0mm^2	1.29mm	11.2mm	TTYCY-1T	0.75mm^2	1.11mm	11.7mm
MPYC-7	1.0mm^2	1.29mm	13.2mm	TTYCY-1Q	0.75mm^2	1.11mm	12.6mm
MPYC-12	1.0mm^2	1.29mm	16.8mm	TTYCY-4	0.75mm^2	1.11mm	17.7mm
TPYC-1.5	1.5mm^2	1.56mm	12.5mm	TTYCY-4S	0.75mm^2	1.11mm	21.1mm
TPYC-2.5	2.5mm^2	2.01mm	13.5mm	TTYCY-4SLA	0.75mm^2	1.11mm	19.5mm
TPYC-4	4.0mm^2	2.55mm	14.7mm	TTYCYS-1	0.75mm^2	1.11mm	12.1mm
TPYCY-1.5	1.5mm^2	1.56mm	14.5mm	TTYCYS-4	0.75mm^2	1.11mm	18.5mm
TPYCY-2.5	2.5mm^2	2.01mm	15.5mm	TTYCYSLA-1	0.75mm^2	1.11mm	11.2mm
TPYCY-4	4.0mm^2	2.55mm	16.9mm	TTYCYSLA-4	0.75mm^2	1.11mm	17.9mm

PACKING LIST IC-218-A-*, IC-218-A-G-*, IC-218-A-*-HK

16AV-X-9852-5 1/1

NAME	OUTLINE	DESCRIPTION/CODE No.	Q'TY
ユニット UNIT			
ﾀｰﾐﾅﾙﾕﾆｯﾄ TERMINAL UNIT	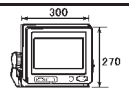	IC-218-A* 000-020-961-00 **	1
予備品 SPARE PARTS			
予備品 SPARE PARTS		SP16-01301 004-439-370-00	1
付属品 ACCESSORIES FP16-02600			
ﾐﾆｷｰﾎﾞｰﾄﾞ KEYBOARD	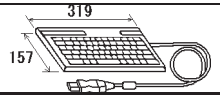	5139U BLACK 000-178-800-11	1
工事材料 INSTALLATION MATERIALS CP16-05200			
ｹｰﾌﾞﾙ組品MJ CABLE ASSY.		MJ-A3SPF0018-050ZC 000-154-025-10	1
工事材料 INSTALLATION MATERIALS		CP16-05201 001-179-830-00	1
工事材料 INSTALLATION MATERIALS		CP16-05202 001-184-540-00	1
図書 DOCUMENT			
ｱﾌﾟﾘｹｰｼｮﾝﾌｫｰﾑ REGISTRATION FOR SERVICE ACTIVATION	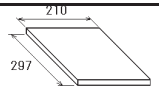	J59-50010-* ﾜ/ｴｲ 000-807-330-1*	1

NAME	OUTLINE	DESCRIPTION/CODE No.	Q'TY
ﾃｽﾄﾓｰﾄﾞ操作手順 SSAS TEST MODE HANDBOOK	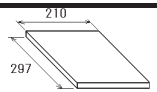	C52-01502-* 000-191-063-1*	1
ﾋｭｰｽﾞ変更のお願い NOTIFICATION DOCUMENT	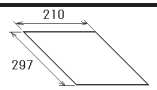	C52-00206-* ﾜ/ｴｲ 000-147-004-1*	1
機器引渡し前の注意 BEFORE DELIVERING TO OWNER	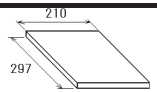	C52-00201-* ﾜ/ｴｲ 000-809-353-1*	1
取扱説明書 OPERATOR'S MANUAL	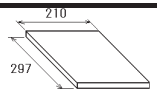	OM*-56740-* 000-176-508-1* **	1
取扱説明書(英) OPERATOR'S MANUAL(EN)	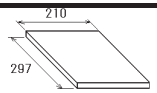	OME-56351-* 000-150-359-1* **	1
操作要領書(英) OPERATOR'S GUIDE (EN)	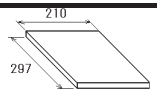	OSE-56740-* 000-176-510-1*	1 (*1)
装備要領書 INSTALLATION MANUAL	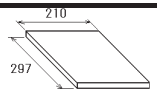	IM*-56740-* 000-176-511-1* **	1
遭難通信要領 DISTRESS COMMUNICATION	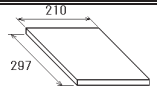	TIC-56350-* ﾜ/ｴｲ 000-809-352-1*	1
ｲﾝﾏﾙCI4ｴﾘｱｶﾞｲﾄﾞ INMARSAT I4 COVERAGE GUIDE	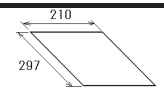	*52-01802-* 000-195-412-1* **	1

ｺｰﾄﾞ番号末尾の[**]は、選択品の代表ｺｰﾄﾞを表します。
CODE NUMBER ENDING WITH "**" INDICATES THE CODE NUMBER OF REPRESENTATIVE MATERIAL
(*1)の書類は、英文仕様専用です。
(*1) MARKED DOCUMENTS ARE FOR ENGLISH SET ONLY.

(略図の寸法は、参考値です。 DIMENSIONS IN DRAWING FOR REFERENCE ONLY.)

A-1

C5674-Z03-F

PACKING LIST

16AV-X-9862 -4 1/1

FELCOM18-A-*-30, FELCOM18-A-*-30-HK, FELCOM18-A-G-*-30

A-2

NAME	OUTLINE	DESCRIPTION/CODE No.	Q'TY
ユニット UNIT			
ｱﾝﾃﾅﾕﾆｯﾄ箱詰品 ANTENNA UNIT COMPLETE SET	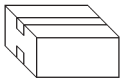	IC-118* 000-021-012-00 **	1
ﾀｰﾐﾅﾙﾕﾆｯﾄ箱詰品 TERMINAL UNIT COMPLETE SET	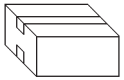	IC-218-A-* 000-020-955-00 **	1
接続箱箱詰品 JUNCTION BOX COMPLETE SET	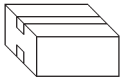	IC-318 000-021-003-00	1
工事材料 INSTALLATION MATERIALS			
ｹｰﾌﾞﾙ組品 CABLE ASSY.	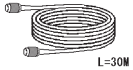	TP5FBAW-5DFB 30M 000-159-523-11	1
工事材料 INSTALLATION MATERIALS		CP16-05511 001-189-560-00	1

ｺｰﾄﾞ番号末尾の[**]は、選択品の代表ｺｰﾄﾞを表します。
CODE NUMBER ENDING WITH "**" INDICATES THE CODE NUMBER OF REPRESENTATIVE MATERIAL.

型式/ｺｰﾄﾞ番号が2段の場合、下段より上段に代わる過渡期品であり、どちらかが入っています。 なお、品質は変わりません。

TWO TYPES AND CODES MAY BE LISTED FOR AN ITEM. THE LOWER PRODUCT MAY BE SHIPPED IN PLACE OF THE UPPER PRODUCT. QUALITY IS THE SAME.

（略図の寸法は、参考値です。 DIMENSIONS IN DRAWING FOR REFERENCE ONLY.）

C5674-Z07-E

PACKING LIST

16AV-X-9866 -4 1/1

FELCOM18-A-*-30-SSAS, FELCOM18-A-G-*30SSAS

A-3

NAME	OUTLINE	DESCRIPTION/CODE No.	Q'TY
ユニット UNIT			
ｱﾝﾃﾅﾕﾆｯﾄ箱詰品 ANTENNA UNIT COMPLETE SET	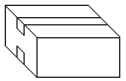	IC-118* 000-021-012-00 **	1
ﾀｰﾐﾅﾙﾕﾆｯﾄ箱詰品 TERMINAL UNIT COMPLETE SET	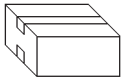	IC-218-A-* 000-020-955-00 **	1
接続箱箱詰品 JUNCTION BOX COMPLETE SET	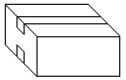	IC-318 000-021-003-00	1
保安警報発呼器 SSAS ALERT UNIT	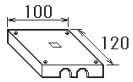	IC-307 000-043-474-00	2
付属品 ACCESSORIES			
付属品 ACCESSORIES		FP16-00901 004-448-050-00	2
工事材料 INSTALLATION MATERIALS			
ｹｰﾌﾞﾙ組品 CABLE ASSY.	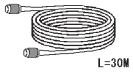	TP5FBAW-5DFB 30M 000-159-523-11	1
工事材料 INSTALLATION MATERIALS		CP16-03101 004-448-040-00	2
工事材料 INSTALLATION MATERIALS		CP16-05511 001-189-560-00	1
図書 DOCUMENT			
IC-30X引き渡し前の注意 BEFORE DELIVERING TO OWNER	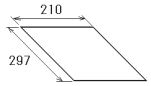	C52-00202-* 000-809-354-1*	1
ｶﾊﾞｰ貼付要領書 ATTACHMENT OF SWITCH COVER	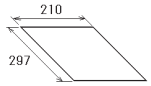	C52-00403-* 000-150-849-1*	1

ｺｰﾄﾞ番号末尾の[**]は、選択品の代表ｺｰﾄﾞを表します。
CODE NUMBER ENDING WITH "**" INDICATES THE CODE NUMBER OF REPRESENTATIVE MATERIAL.

型式/ｺｰﾄﾞ番号が2段の場合、下段より上段に代わる過渡期品であり、どちらかが入っています。 なお、品質は変わりません。

TWO TYPES AND CODES MAY BE LISTED FOR AN ITEM. THE LOWER PRODUCT MAY BE SHIPPED IN PLACE OF THE UPPER PRODUCT. QUALITY IS THE SAME.

（略図の寸法は、参考値です。 DIMENSIONS IN DRAWING FOR REFERENCE ONLY.）

C5674-Z11-E

PACKING LIST

16AV-X-9851 -1 1/1

IC-118/-HK

A-4

NAME	OUTLINE	DESCRIPTION/CODE No.	Q'TY
ユニット UNIT			
ｱﾝﾃﾅﾕﾆｯﾄ ANTENNA UNIT	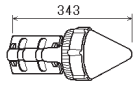	IC-118* 000-020-943-00 **	1
付属品 ACCESSORIES			
付属品 ACCESSORIES		FP16-02501 001-175-970-00	1
図書 DOCUMENT			
ｱﾝﾃﾅ交換方法 ANTENNA INSTALL/REPALCE	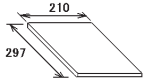	TIC-56351-* 000-173-370-1*	1

ｺｰﾄﾞ番号末尾の[**]は、選択品の代表ｺｰﾄﾞを表します。
CODE NUMBER ENDING WITH "**" INDICATES THE CODE NUMBER OF REPRESENTATIVE MATERIAL.

型式/ｺｰﾄﾞ番号が2段の場合、下段より上段に代わる過渡期品であり、どちらかが入っています。 なお、品質は変わりません。

TWO TYPES AND CODES MAY BE LISTED FOR AN ITEM. THE LOWER PRODUCT MAY BE SHIPPED IN PLACE OF THE UPPER PRODUCT. QUALITY IS THE SAME.

（略図の寸法は、参考値です。 DIMENSIONS IN DRAWING FOR REFERENCE ONLY.）

C5674-Z02-B

PACKING LIST

16AV-X-9854 -0 1/1

IC-318

A-5

NAME	OUTLINE	DESCRIPTION/CODE No.	Q'TY
ユニット UNIT			
接続箱 JUNCTION BOX	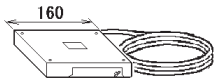	IC-318 000-020-971-00	1
工事材料 INSTALLATION MATERIALS			
工事材料 INSTALLATION MATERIALS		CP16-05101 001-180-020-00	1

型式/ｺｰﾄﾞ番号が2段の場合、下段より上段に代わる過渡期品であり、どちらかが入っています。 なお、品質は変わりません。

TWO TYPES AND CODES MAY BE LISTED FOR AN ITEM. THE LOWER PRODUCT MAY BE SHIPPED IN PLACE OF THE UPPER PRODUCT. QUALITY IS THE SAME.

（略図の寸法は、参考値です。 DIMENSIONS IN DRAWING FOR REFERENCE ONLY.）

C5674-Z05-A

PACKING LIST

16AK-X-9856 -3 1/1

A-6

IC-306

NAME	OUTLINE	DESCRIPTION/CODE №	Q'TY
ユニット UNIT			
着信指示器 ALARM UNIT	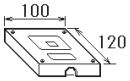	IC-306 000-043-429-00	1
工事材料 INSTALLATION MATERIALS CP16-02201			
+ﾄﾗｽﾀｯﾋﾟﾝﾈｼﾞ 1ｼｭ SELF-TAPPING SCREW	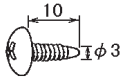	3X10 SUS304 000-162-604-10	4
圧着端子 CRIMP-ON LUG	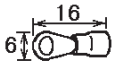	FV1.25-3(LF) 000-166-756-10	4
圧着端子 CRIMP-ON LUG	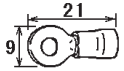	FV2-3 000-157-246-10	1

型式/ｺｰﾄﾞ番号が2段の場合、下段より上段に代わる過渡期品であり、どちらかが入っています。 なお、品質は変わりません。

TWO TYPES AND CODES MAY BE LISTED FOR AN ITEM. THE LOWER PRODUCT MAY BE SHIPPED IN PLACE OF THE UPPER PRODUCT.QUALITY IS THE SAME.

略図の寸法は、参考値です。 DIMENSIONS IN DRAWING FOR REFERENCE ONLY.)

C5635-Z05-C

PACKING LIST

16AK-X-9855 -3 1/1

A-7

IC-305

NAME	OUTLINE	DESCRIPTION/CODE №	Q'TY
ユニット UNIT			
遭難警報器 DISTRESS ALERT UNIT	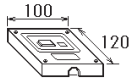	IC-305 000-043-427-00 **	1
工事材料 INSTALLATION MATERIALS CP16-02201			
+ﾄﾗｽﾀｯﾋﾟﾝﾈｼﾞ 1ｼｭ SELF-TAPPING SCREW	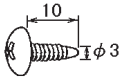	3X10 SUS304 000-162-604-10	4
圧着端子 CRIMP-ON LUG	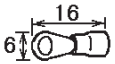	FV1.25-3(LF) 000-166-756-10	4
圧着端子 CRIMP-ON LUG	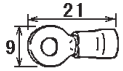	FV2-3 000-157-246-10	1
図書 DOCUMENT			
IC-305/307引き渡し前の注意 BEFORE DELIVERING TO OWNER	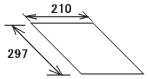	C52-00202-* 000-809-354-1*	1 (*1)

1.(*1)の＊＊＊＊は、有り/無しの仕様が有ります。
AVAILABLE WITH OR WITHOUT ***** UNIT.

型式/ｺｰﾄﾞ番号が2段の場合、下段より上段に代わる過渡期品であり、どちらかが入っています。 なお、品質は変わりません。

TWO TYPES AND CODES MAY BE LISTED FOR AN ITEM. THE LOWER PRODUCT MAY BE SHIPPED IN PLACE OF THE UPPER PRODUCT.QUALITY IS THE SAME.

略図の寸法は、参考値です。 DIMENSIONS IN DRAWING FOR REFERENCE ONLY.)

C5635-Z04-C

PACKING LIST

16AK-X-9853 -6 1/1

A-8

IC-307

NAME	OUTLINE	DESCRIPTION/CODE №	Q'TY
ユニット UNIT			
保安警報発呼器 SSAS ALERT UNIT	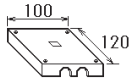	IC-307 000-043-474-00	1
付属品 ACCESSORIES			
DｶﾊﾞｰL組品 DISTRESS COVER	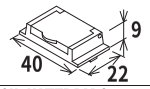	05-073-1111-0 ROHS 100-274-720-10	1
工事材料 INSTALLATION MATERIALS			
+ﾄﾗｽﾀｯﾋﾟﾝﾈｼﾞ 1ｼｭ SELF-TAPPING SCREW	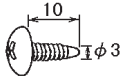	3X10 SUS304 000-162-604-10	4
圧着端子 CRIMP-ON LUG	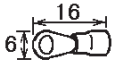	FV1.25-3(LF) 000-166-756-10	8
圧着端子 CRIMP-ON LUG	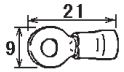	FV2-3 000-157-246-10	2
図書 DOCUMENT			
IC-305/307引き渡し前の注意 BEFORE DELIVERING TO OWNER	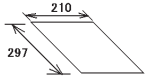	C52-00202-* 000-809-354-1*	1
ｶﾊﾞｰ貼付要領書 ATTACHMENT OF SWITCH COVER	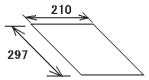	C52-00403-* 000-150-849-1*	1

型式/ｺｰﾄﾞ番号が2段の場合、下段より上段に代わる過渡期品であり、どちらかが入っています。 なお、品質は変わりません。

TWO TYPES AND CODES MAY BE LISTED FOR AN ITEM. THE LOWER PRODUCT MAY BE SHIPPED IN PLACE OF THE UPPER PRODUCT. QUALITY IS THE SAME.

略図の寸法は、参考値です。 DIMENSIONS IN DRAWING FOR REFERENCE ONLY.)

C5635-Z02-D

A-9

FURUNO

CODE NO.	001-179-830-00	16AV-X-9402 -1
TYPE	CP16-05201	1/1

工事材料表

INSTALLATION MATERIALS

番号 NO.	名称 NAME	略図 OUTLINE	型名／規格 DESCRIPTIONS	数量 Q'TY	用途／備考 REMARKS
1	ﾋｭｰｽﾞﾊﾘﾏｰｸ FUSE LABEL	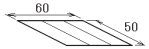	03-153-1312-0 ROHS CODE NO. 100-292-140-10	1	
2	ｱｰｽ板 COPPER STRAP	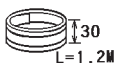	05-003-0031-0 ROHS CODE NO. 590-300-310-10	1	
3	LANｹｰﾌﾞﾙｻﾎﾟｰﾄ LAN CABLE SUPPORTING	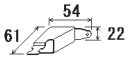	16-023-3532-0 CODE NO. 100-369-610-10	1	
4	LANﾖｳｽﾎﾟﾝｼﾞ SPONGE FOR LAN	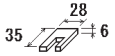	16-023-3533-0 CODE NO. 100-369-620-10	1	
5	+ﾄﾗｽﾀｯﾋﾟﾝﾈｼﾞ 1ｼｭ SELF-TAPPING SCREW	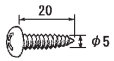	5X20 SUS304 CODE NO. 000-162-608-10	4	
6	ｺﾝﾍﾞｯｸｽ CABLE TIE	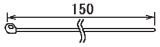	CV-150B CODE NO. 000-167-183-10	2	
7	ﾋｭｰｽﾞ GLASS TUBE FUSE	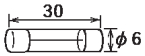	FGB0-A 125V 7A PBF CODE NO. 000-164-965-10	1	

(略図の寸法は、参考値です。 DIMENSIONS IN DRAWING FOR REFERENCE ONLY.)

FURUNO ELECTRIC CO., LTD.

C5674-M01-B

FURUNO

CODE NO.	001-189-560-00	16AV-X-9404 -3
TYPE	CP16-05511	1/1

工事材料表

INSTALLATION MATERIALS

番号 NO.	名称 NAME	略図 OUTLINE	型名／規格 DESCRIPTIONS		数量 Q'TY	用途／備考 REMARKS
1	ｺﾝﾍﾞｯｸｽ CABLE TIE	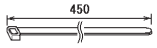	CV-450B	CODE NO. 000-173-169-10	5	ｱﾝﾃﾅｹｰﾌﾞﾙ固定用 For securing the antenna cable
2	ﾌﾞﾁﾙｺﾞﾑﾃｰﾌﾟ SELF-BONDING TAPE	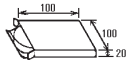	NO.15	CODE NO. 000-174-646-10	1	
3	ｹｰﾌﾞﾙ組品 CABLE ASSY.	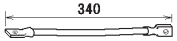	RW-4747	CODE NO. 000-566-000-12	1	

（略図の寸法は、参考値です。 DIMENSIONS IN DRAWING FOR REFERENCE ONLY.）

FURUNO ELECTRIC CO., LTD.

C5674-M04-D

FURUNO

CODE NO.	001-180-020-00	16AV-X-9401 -0
TYPE	CP16-05101	1/1

工事材料表

INSTALLATION MATERIALS

番号 NO.	名称 NAME	略図 OUTLINE	型名／規格 DESCRIPTIONS		数量 Q'TY	用途／備考 REMARKS
1	+ﾄﾗｽﾀｯﾋﾟﾝﾈｼﾞ 1ｼｭ SELF TAPPING SCREW	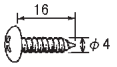	4X16 SUS304	CODE NO. 000-162-605-10	4	

型式/ｺｰﾄﾞ番号が２段の場合、下段より上段に代わる過渡期品であり、どちらかが入っています。 なお、品質は変わりません。

TWO TYPES AND CODES MAY BE LISTED FOR AN ITEM. THE LOWER PRODUCT MAY BE SHIPPED IN PLACE OF THE UPPER PRODUCT. QUALITY IS THE SAME.

（略図の寸法は、参考値です。 DIMENSIONS IN DRAWING FOR REFERENCE ONLY.）

FURUNO ELECTRIC CO., LTD.

C5674-M03-A

FURUNO

CODE NO.	001-184-540-00	16AV-X-9403 -0
TYPE	CP16-05202	1/1

工事材料表

INSTALLATION MATERIALS

番号 NO.	名称 NAME	略図 OUTLINE	型名／規格 DESCRIPTIONS		数量 Q'TY	用途／備考 REMARKS
1	ﾌｧｽﾅｰ(3) HOOK LOOP FASTENER	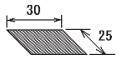	16-007-6814-0 ROHS	CODE NO. 100-237-670-10	4	
2	ﾌｧｽﾅｰ(4) HOOK LOOP FASTENER	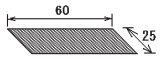	16-007-6815-0 ROHS	CODE NO. 100-237-680-10	4	
3	ﾊﾘﾏｰｸ LABEL	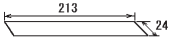	16-023-3552-0	CODE NO. 100-373-800-10	1	

型式/ｺｰﾄﾞ番号が２段の場合、下段より上段に代わる過渡期品であり、どちらかが入っています。 なお、品質は変わりません。

TWO TYPES AND CODES MAY BE LISTED FOR AN ITEM. THE LOWER PRODUCT MAY BE SHIPPED IN PLACE OF THE UPPER PRODUCT. QUALITY IS THE SAME.

（略図の寸法は、参考値です。 DIMENSIONS IN DRAWING FOR REFERENCE ONLY.）

FURUNO ELECTRIC CO., LTD.

C5674-M02-A

FURUNO

CODE NO.	004-439-370-00	16AK-X-9301-4 1/1
TYPE	SP16-01301	BOX NO. P

SHIP NO.	SPARE PARTS LIST FOR	U S E	SETS PER VESSEL

ITEM NO.	NAME OF PART	OUTLINE	DWG. NO. OR TYPE NO.	QUANTITY WORKING PER SET	QUANTITY WORKING PER VES	QUANTITY SPARE	REMARKS/CODE NO.
1	ﾋｭｰｽﾞ GLASS TUBE FUSE	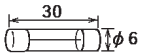	FGBO-A 125V 15A PBF	1	1	1	000-155-827-10
2	ﾋｭｰｽﾞ GLASS TUBE FUSE	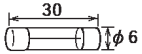	FGBO-A 125V 7A PBF	1	1	1	000-164-965-10

MFR'S NAME	FURUNO ELECTRIC CO.,LTD.	DWG NO.	C5635-P01-E	1/1

（略図の寸法は、参考値です。 DIMENSIONS IN DRAWING FOR REFERENCE ONLY.）

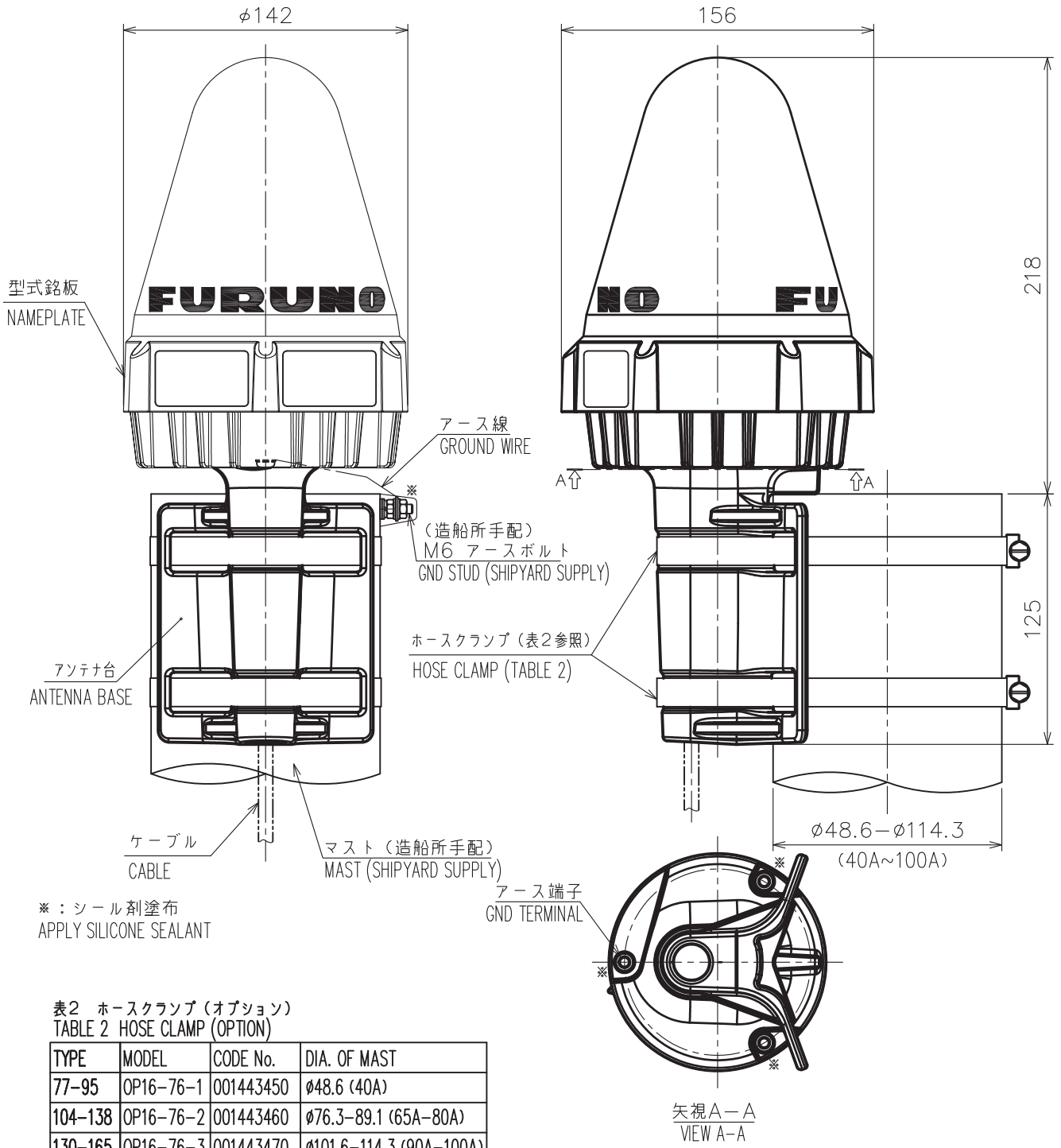

表2 ホースクランプ（オプション）
TABLE 2 HOSE CLAMP (OPTION)

TYPE	MODEL	CODE No.	DIA. OF MAST
77-95	OP16-76-1	001443450	ø48.6 (40A)
104-138	OP16-76-2	001443460	ø76.3-89.1 (65A-80A)
130-165	OP16-76-3	001443470	ø101.6-114.3 (90A-100A)

注 記 1）指定外の寸法公差は表1による。
2）対応マスト径は40A（ø48.6）~100A（ø114.3）

NOTE 1. TABLE 1 INDICATES TOLERANCE OF DIMENSIONS WHICH IS NOT SPECIFIED.
2. MAST DIAMETER: 40A (ø48.6) TO 100A (ø114.3)

表1 TABLE 1

寸法区分（mm） DIMENSION	公差（mm） TOLERANCE
L≦50	±1.5
50<L≦100	±2.5
100<L≦500	±3

DRAWN 15/Feb/2016 T.YAMASAKI		TITLE	IC-115/116/118/119
CHECKED 16/Feb/2016 H.MAKI		名称	アンテナユニット
APPROVED 22/Feb/2016 H.MAKI	FELCOM 15/16/18/19		外寸図
SCALE 1/3 MASS 1.9 ±10% kg	質量は工材を含む MASS INCLUDES INSTALLATION MATERIALS	NAME	ANTENNA UNIT
DWG.No. C5674-G05- E	REF.No. 16-023-254G-1		OUTLINE DRAWING

FURUNO

表 1　TABLE 1

寸法区分（mm） DIMENSION	公差（mm） TOLERANCE
L≦50	±1.5
50<L≦100	±2.5
100<L≦500	±3

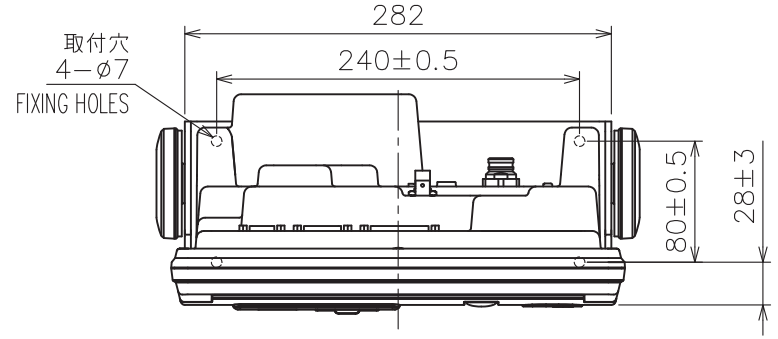

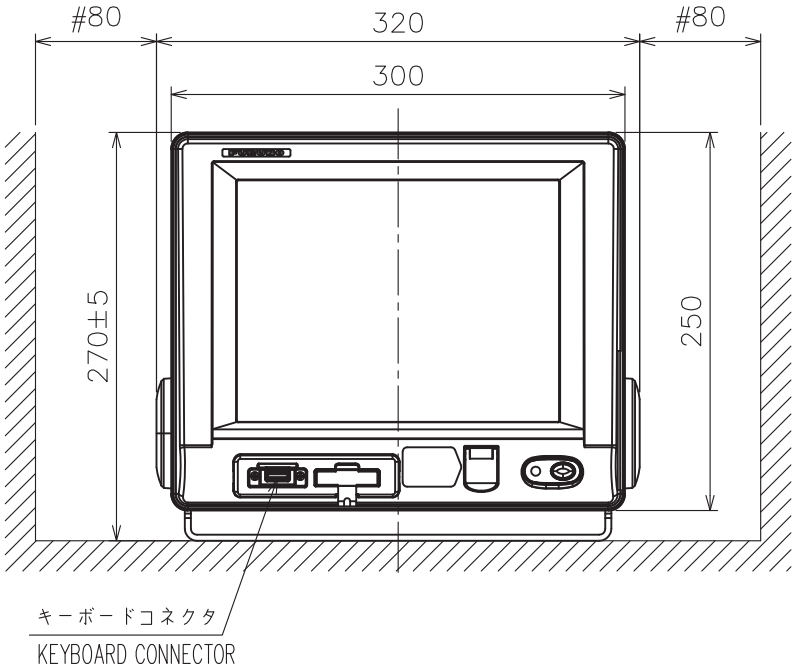

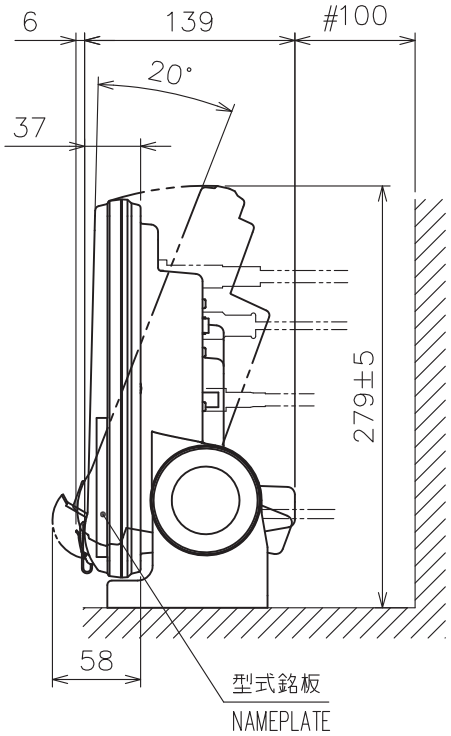

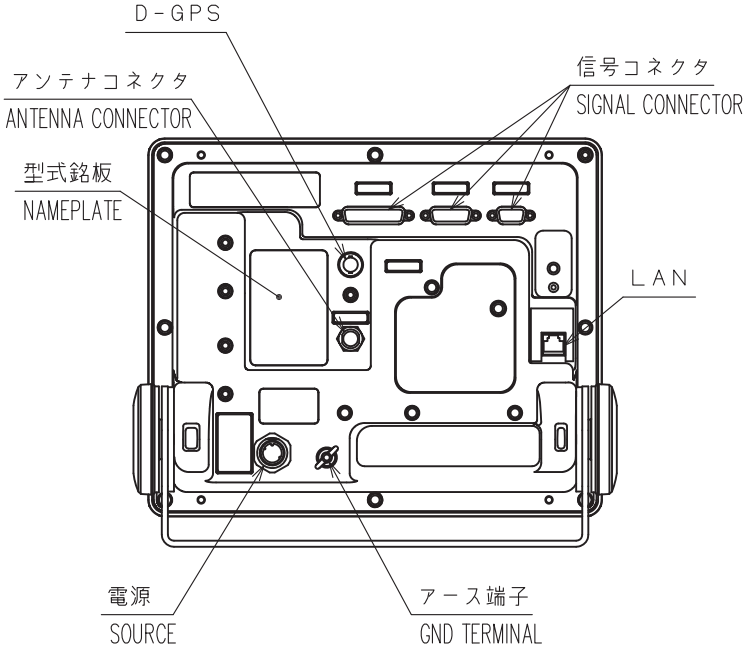

注　記　1）指定外の寸法公差は表１による。
　　2）＃印寸法は最小サービス空間寸法とする。
　　3）取付用ネジはトラスタッピンネジ呼び径５×２０を使用のこと。

NOTE　1. TABLE 1 INDICATES TOLERANCE OF DIMENSIONS WHICH IS NOT SPECIFIED.
　　2. #: MINIMUM SERVICE CLEARANCE.
　　3. USE TAPPING SCREWS ø5x20 FOR FIXING THE UNIT.

DRAWN 20/Jan/2012 T.YAMASAKI		TITLE	IC-218
CHECKED 20/Jan/2012 H.MAKI		名称	ターミナルユニット（卓上装備）
APPROVED 24/Jan/2012 Y.NISHIYAMA	FELCOM 18		外寸図
SCALE 1/5	MASS 4.0 ±10% kg 質量はケーブルを含まず。MASS DOES NOT INCLUDE CABLE.	NAME	TERMINAL UNIT (TABLETOP MOUNT)
DWG.No. C5674-G01- A	REF.No. 16-023-351G-0		OUTLINE DRAWING

D-2

FURUNO ELECTRIC CO., LTD.

FURUNO

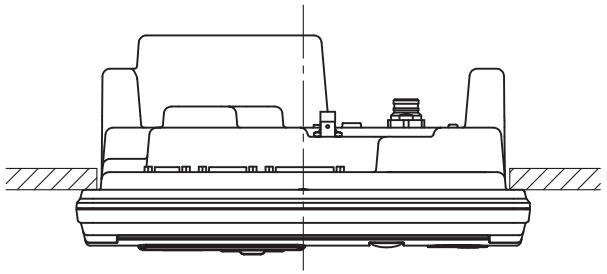

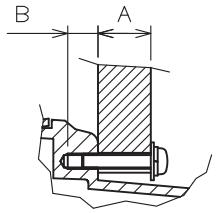

取付部詳細 （尺度：1／2）
DETAIL FOR FIXING (SCALE: 1/2)

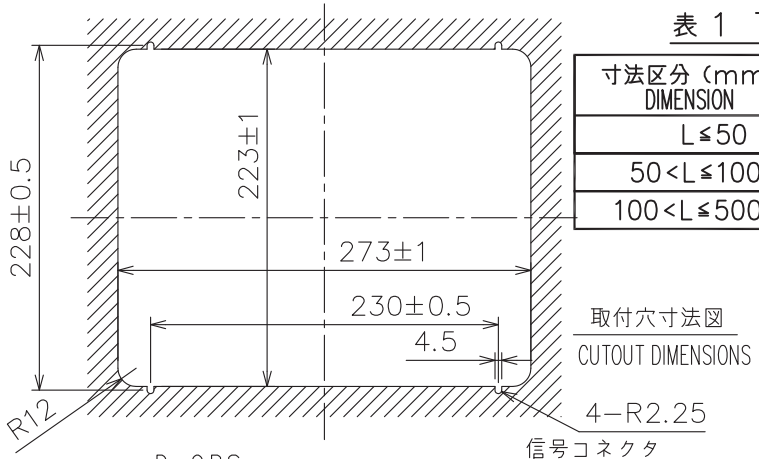

取付穴寸法図
CUTOUT DIMENSIONS

表 1 TABLE 1

寸法区分（mm） DIMENSION	公差（mm） TOLERANCE
L≦50	±1.5
50<L≦100	±2.5
100<L≦500	±3

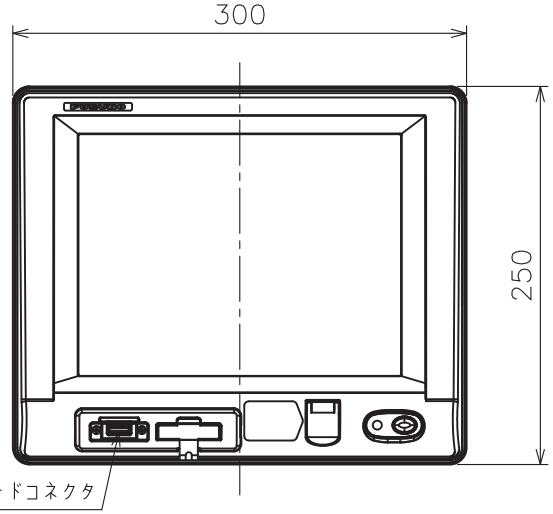

キーボードコネクタ
KEYBOARD CONNECTOR

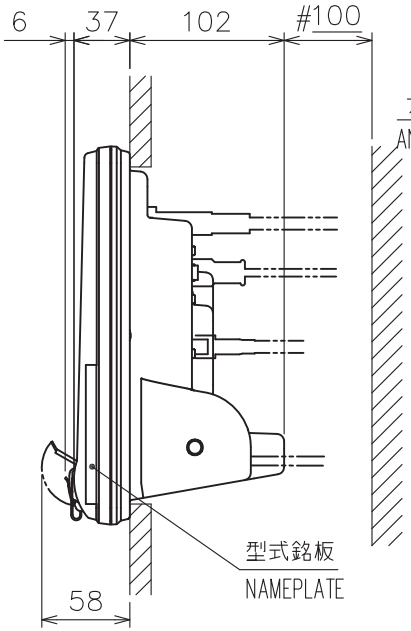

型式銘板
NAMEPLATE

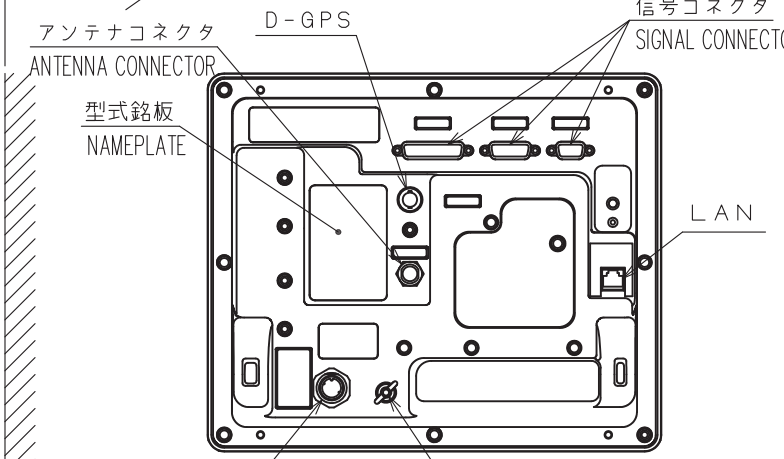

注 記 1）指定外の寸法公差は表１による。
2）＃印寸法は最小サービス空間寸法とする。
3）取付用ネジは、セムスネジＢ Ｍ４×２０を使用のこと。
壁厚さ（Ａ）は１１≦Ａ≦１４とする。
または、ネジ長さを（Ａ＋７．８）±２とする。
筐体にはネジ部を８ｍｍ以上入れないこと。（Ｂ≦８）

NOTE 1. TABLE 1 INDICATES TOLERANCE OF DIMENSIONS WHICH IS NOT SPECIFIED.
2. #: MINIMUM SERVICE CLEARANCE.
3. USE SEMS B SCREWS M4x20 FOR FIXING THE UNIT.
THICKNESS (A): 11≦A≦14 OR SCREW LENGTH: (A+7.8)±2.
DO NOT FASTEN SCREWS INTO UNIT MORE THAN 8 mm (B≦8).

DRAWN 20/Jan/2012 T.YAMASAKI		TITLE	IC-218
CHECKED 20/Jan/2012 H.MAKI		名称	ターミナルユニット（埋込装備）
APPROVED 24/Jan/2012 Y.NISHIYAMA	FELCOM 18		外寸図
SCALE 1/5	MASS 3.4 ±10% kg 質量はケーブルを含まず。 MASS DOES NOT INCLUDE CABLE.	NAME	TERMINAL UNIT (FLUSH MOUNT)
DWG.No. C5674-G02- A	REF.No. 16-023-352G-0		OUTLINE DRAWING

D-3

FURUNO ELECTRIC CO., LTD.

表1 TABLE 1

寸法区分（mm） DIMENSION	公差（mm） TOLERANCE
L≦50	±1.5
50<L≦100	±2.5
100<L≦500	±3

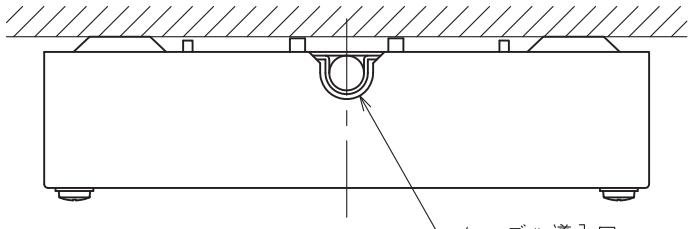

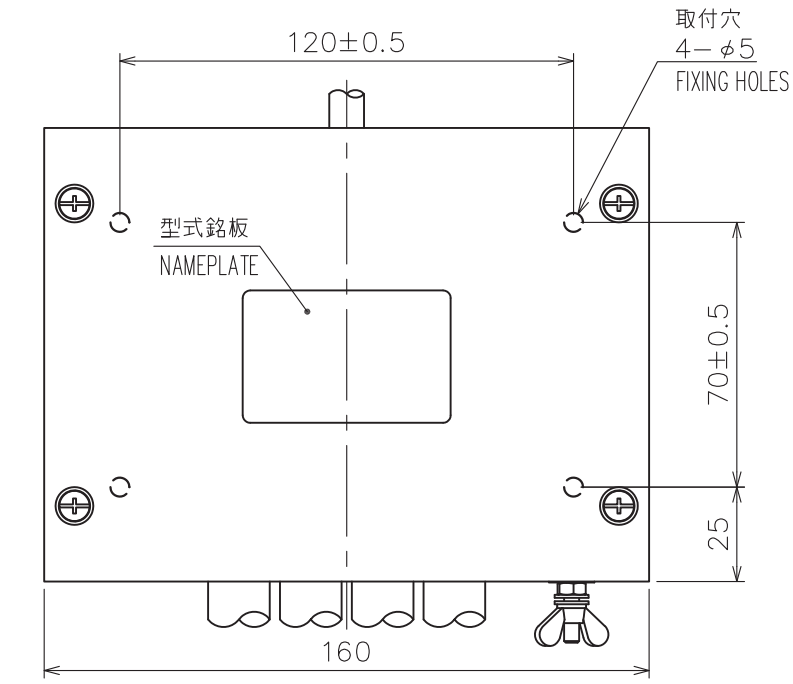

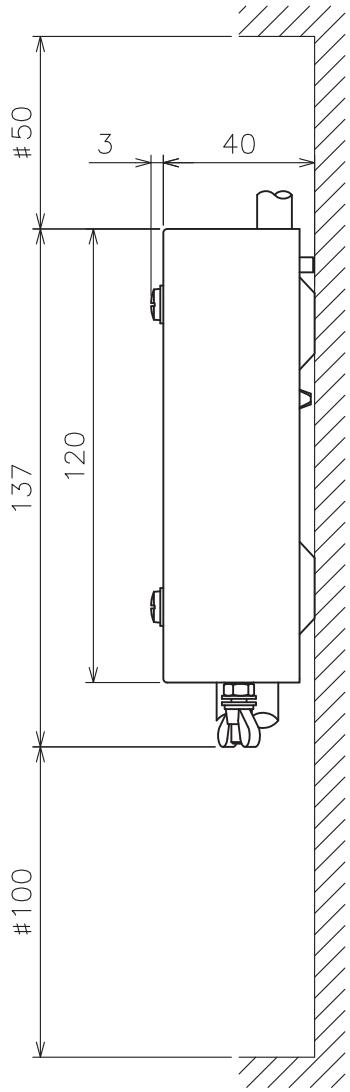

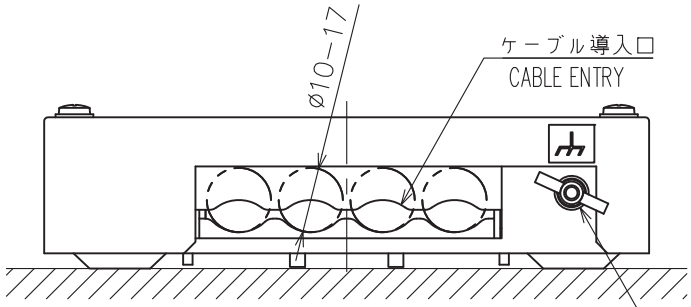

アース端子
GND TERMINAL

注記
1）指定なき寸法公差は表1による。
2）#印寸法は、最小サービス空間寸法とする。
3）取付にはトラスタッピンネジ呼び径4×16を使用のこと。

NOTE
1. TABLE 1 INDICATES TOLERANCE OF DIMENSIONS WHICH IS NOT SPECIFIED.
2. #: MINIMUM SERVICE CLEARANCE.
3. USE TAPPING SCREWS φ4x16 FOR FIXING THE UNIT.

DRAWN 17/May/2012 T.YAMASAKI		TITLE	IC-318
CHECKED 17/May/2012 H.MAKI		名称	接続箱
APPROVED 17/May/2012 Y.NISHIYAMA	FELCOM 18/19		外寸図
SCALE 1/2 MASS 0.7 ±10% kg	質量はケーブルを含まず。 MASS DOES NOT INCLUDE CABLE.	NAME	JUNCTION BOX
DWG. No. C5674-G03- B	REF. No. 16-023-550G-1		OUTLINE DRAWING

FURUNO

D-5

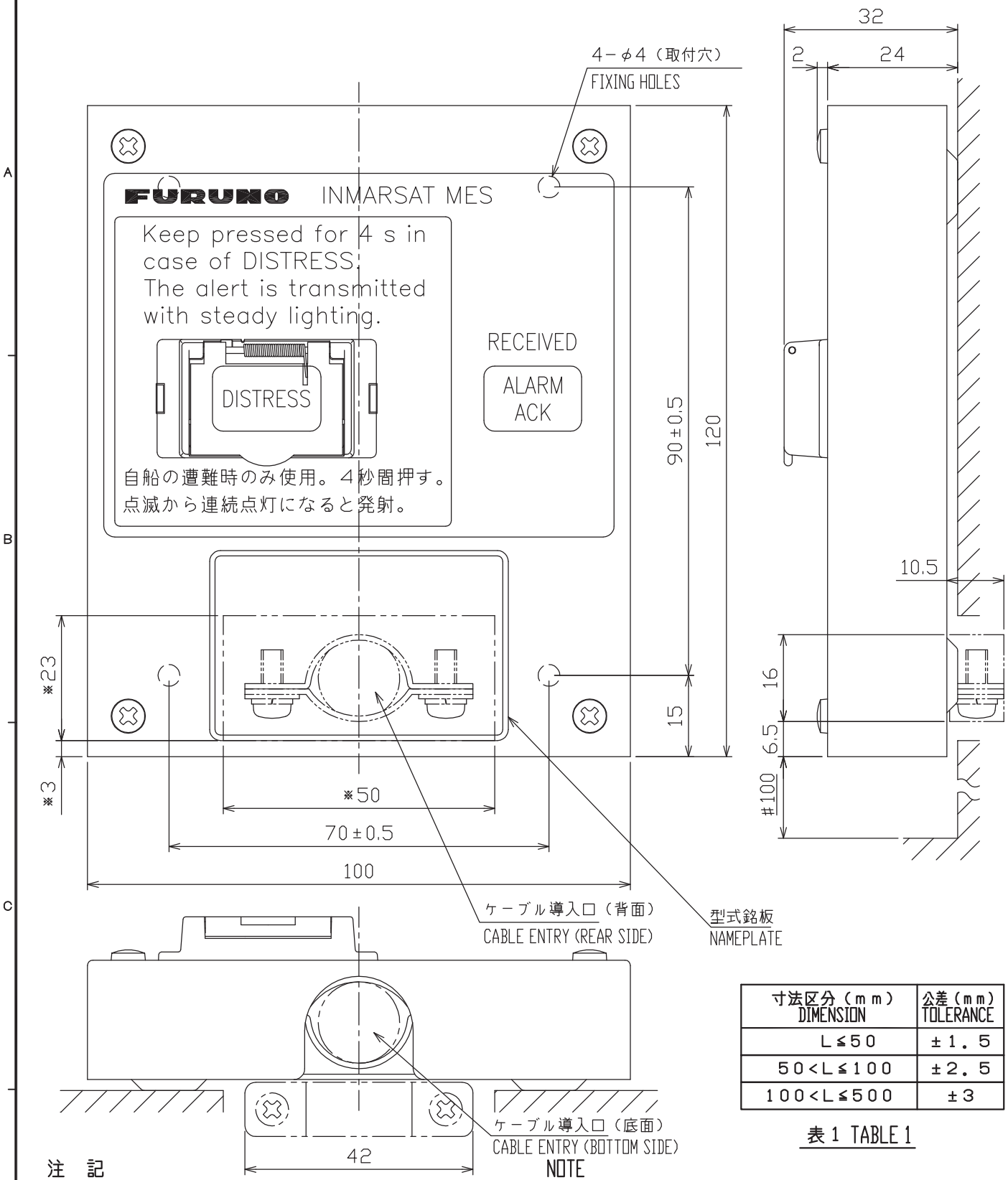

寸法区分（mm）DIMENSION	公差（mm）TOLERANCE
L≦50	±1.5
50<L≦100	±2.5
100<L≦500	±3

表１ TABLE 1

注　記

１）＃印寸法は最小サービス空間寸法とする。
２）指定外の寸法公差は表１による。
３）取付には＋タッピンネジ３×１０を使用のこと。
４）※印寸法は、背面からのケーブル導入穴寸法。

NOTE

1. #: RECOMMENDED SERVICE CLEARANCE.
2. TABLE 1 INDICATES TOLERANCE OF DIMENSIONS.
3. USE TAPPING SCREWS 3x10 FOR FIXING THE UNIT.
4. ※: CUTOUT DIMENSIONS FOR REAR SIDE CABLE ENTRY.

DRAWN July 11 '03 T.YAMASAKI			TITLE IC-305
CHECKED July 14 '03 T.Matsuguchi			名称 遭難警報器
APPROVED July 14'03 T.Matsuguchi	FELCOM 15/16		外寸図
SCALE 1/1	MASS 0.34 ±10% kg		NAME DISTRESS ALERT/RECEIVED CALL UNIT
DWG No. C5635-G04- B	16-018-400G-1		OUTLINE DRAWING

FURUNO ELECTRIC CO., LTD.

FURUNO

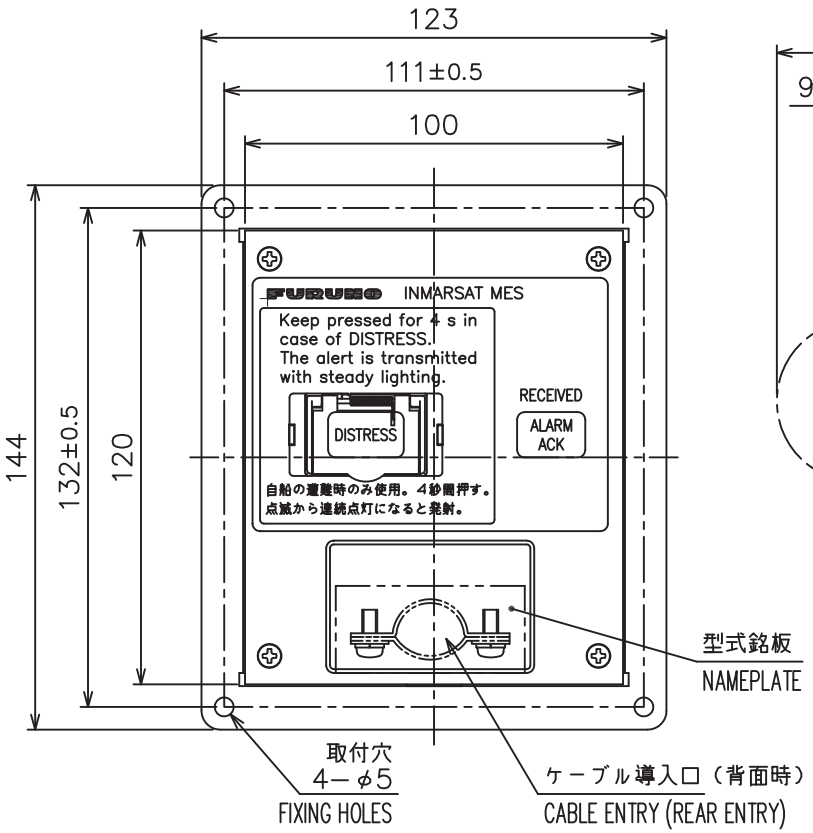

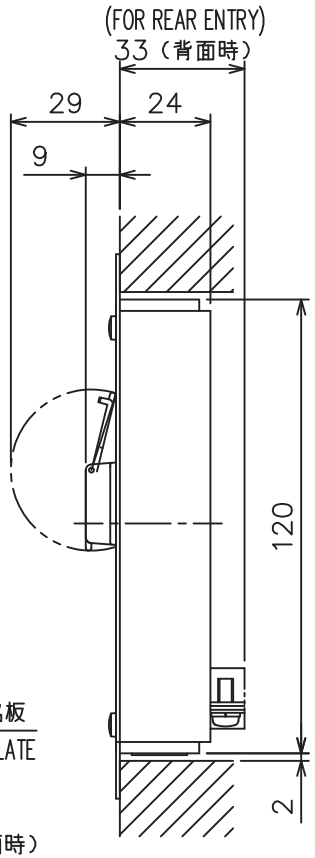

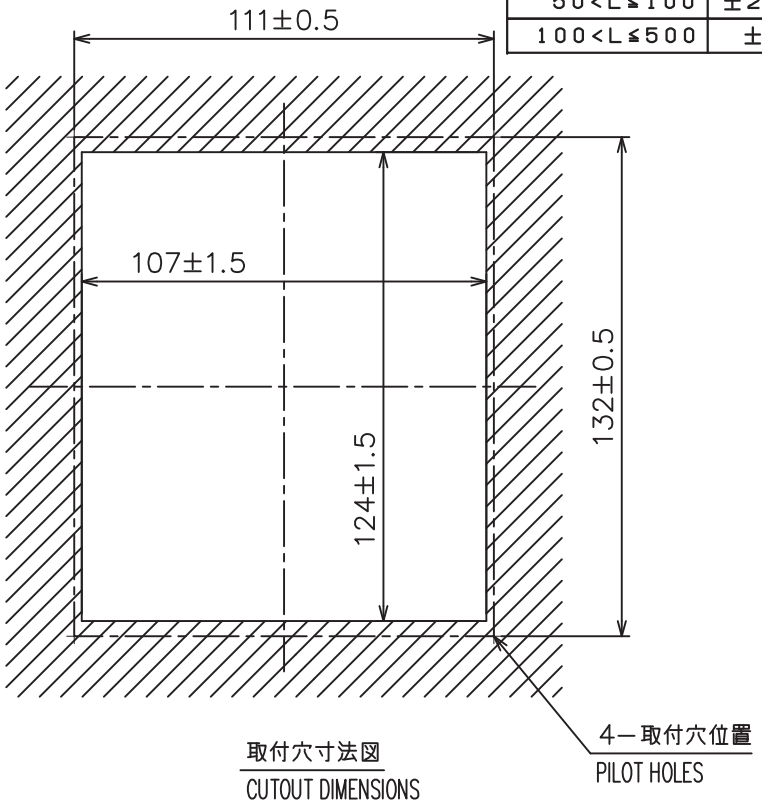

表 1 TABLE 1

寸法区分（mm）DIMENSION	公差（mm）TOLERANCE
L≦50	±1.5
50<L≦100	±2.5
100<L≦500	±3

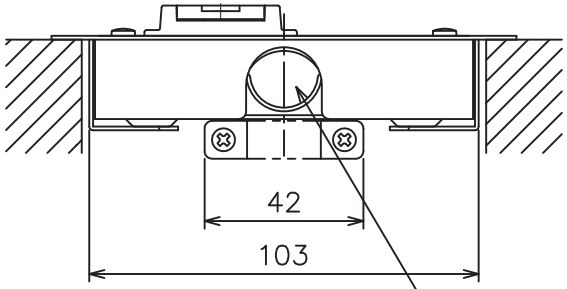

注　記　1）指定外の寸法公差は表１による。
　　2）取付用ネジは＋トラスタッピンネジ呼び径４×１６を使用のこと。

NOTE　1. TABLE 1 INDICATES TOLERANCE OF DIMENSIONS WHICH IS NOT SPECIFIED.
　　2. USE TAPPING SCREWS ø4x16 FOR FIXING THE UNIT.

DRAWN 17/May/2012 T.YAMASAKI			TITLE IC-305
CHECKED 17/May/2012 H.MAKI			名称 遭難警報器（埋込装備）
APPROVED 17/May/2012 Y.NISHIYAMA	FELCOM 15/18		外寸図
SCALE 1/2	MASS 0.45 ±10% kg		NAME DISTRESS ALERT/RECEIVED CALL UNIT (FLUSH MOUNT)
DWG.No. C5635-G12- C	REF.No. 16-018-410G-3		OUTLINE DRAWING

D-6

FURUNO ELECTRIC CO., LTD.

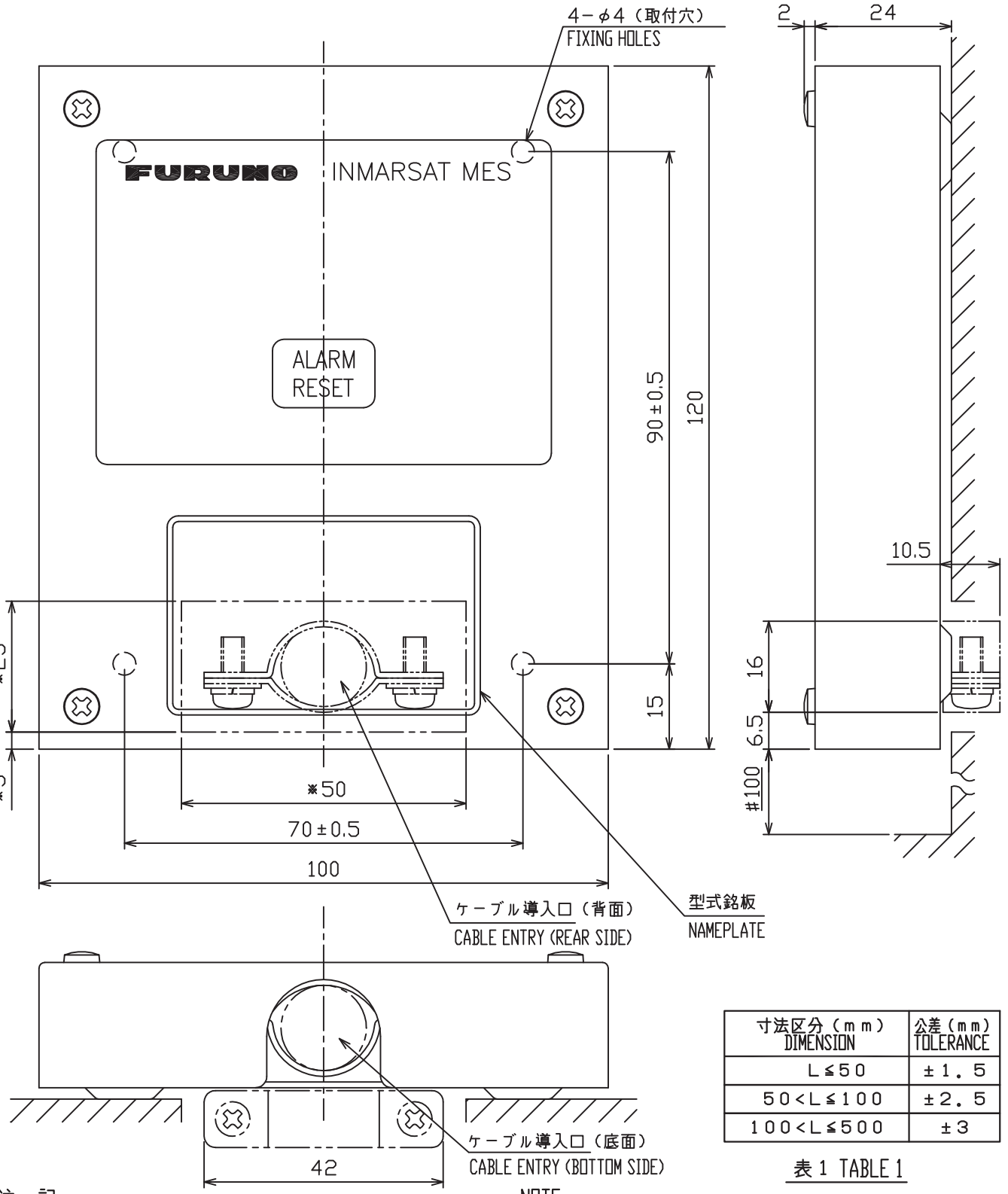

寸法区分（mm）DIMENSION	公差（mm）TOLERANCE
L≦50	±1.5
50<L≦100	±2.5
100<L≦500	±3

表1 TABLE 1

注　記

1）#印寸法は最小サービス空間寸法とする。
2）指定外の寸法公差は表1による。
3）取付には＋タッピンネジ3×10を使用のこと。
4）※印寸法は、背面からのケーブル導入穴寸法。

NOTE

1. #: RECOMMENDED SERVICE CLEARANCE.
2. TABLE 1 INDICATES TOLERANCE OF DIMENSIONS.
3. USE TAPPING SCREWS 3x10 FOR FIXING THE UNIT.
4. ※: CUTOUT DIMENSIONS FOR REAR SIDE CABLE ENTRY.

DRAWN Dec. 19 '02 T.YAMASAKI			TITLE IC-306
CHECKED Dec. 19 '02 Y.KIMURA			名称 アラームユニット
APPROVED Dec. 20, '02 Y. Kimura	FELCOM 15/16		外寸図
SCALE 1/1	MASS 0.33 ±10% kg		NAME ALARM UNIT
DWG No. C5635-G05- B	16-018-500G-1		OUTLINE DRAWING

FURUNO

表 1 TABLE 1

寸法区分（mm）DIMENSION	公差（mm）TOLERANCE
L≦50	±1.5
50<L≦100	±2.5
100<L≦500	±3

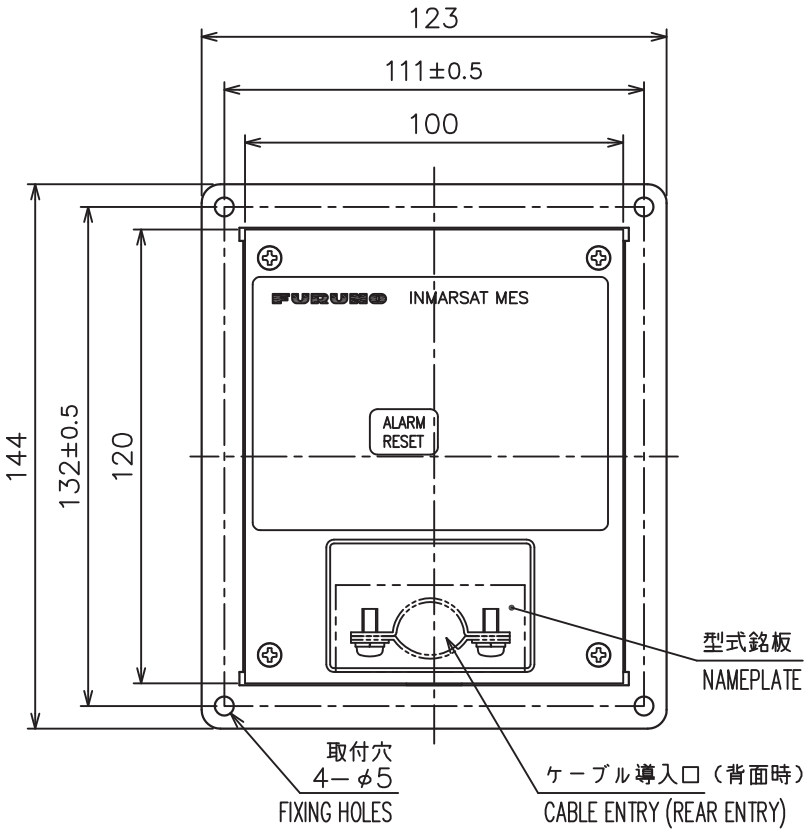

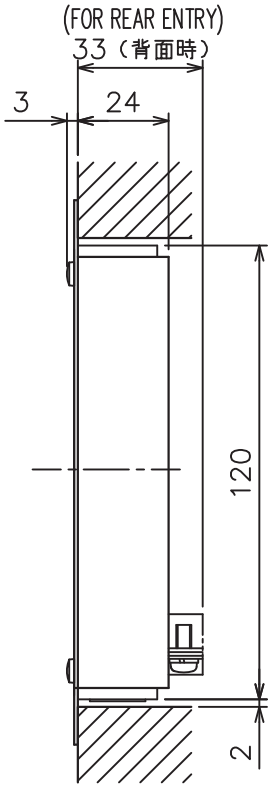

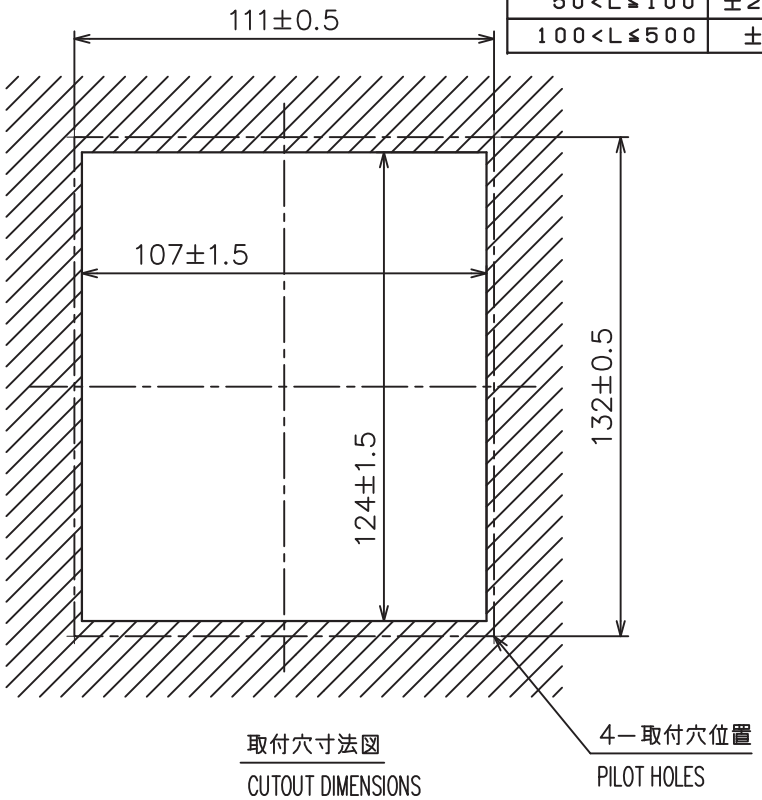

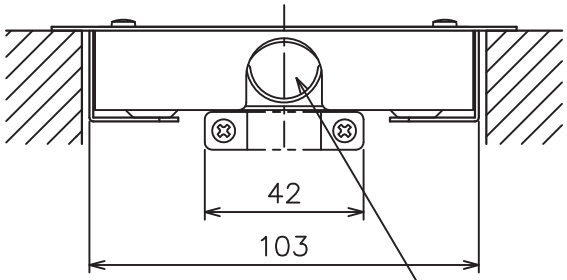

注　記　1）指定外の寸法公差は表1による。
　　2）取付用ネジは＋トラスタッピンネジ呼び径４×１６を使用のこと。

NOTE　1. TABLE 1 INDICATES TOLERANCE OF DIMENSIONS WHICH IS NOT SPECIFIED.
　　2. USE TAPPING SCREWS ø4x16 FOR FIXING THE UNIT.

DRAWN 17/May/2012 T.YAMASAKI		TITLE	IC-306
CHECKED 17/May/2012 H.MAKI		名称	アラームユニット（埋込装備）
APPROVED 17/May/2012 Y.NISHIYAMA	FELCOM 15/18		外寸図
SCALE 1/2 MASS 0.44 ±10% kg		NAME	ALARM UNIT (FLUSH MOUNT)
DWG.No. C5635-G09- C	REF.No. 16-018-510G-2		OUTLINE DRAWING

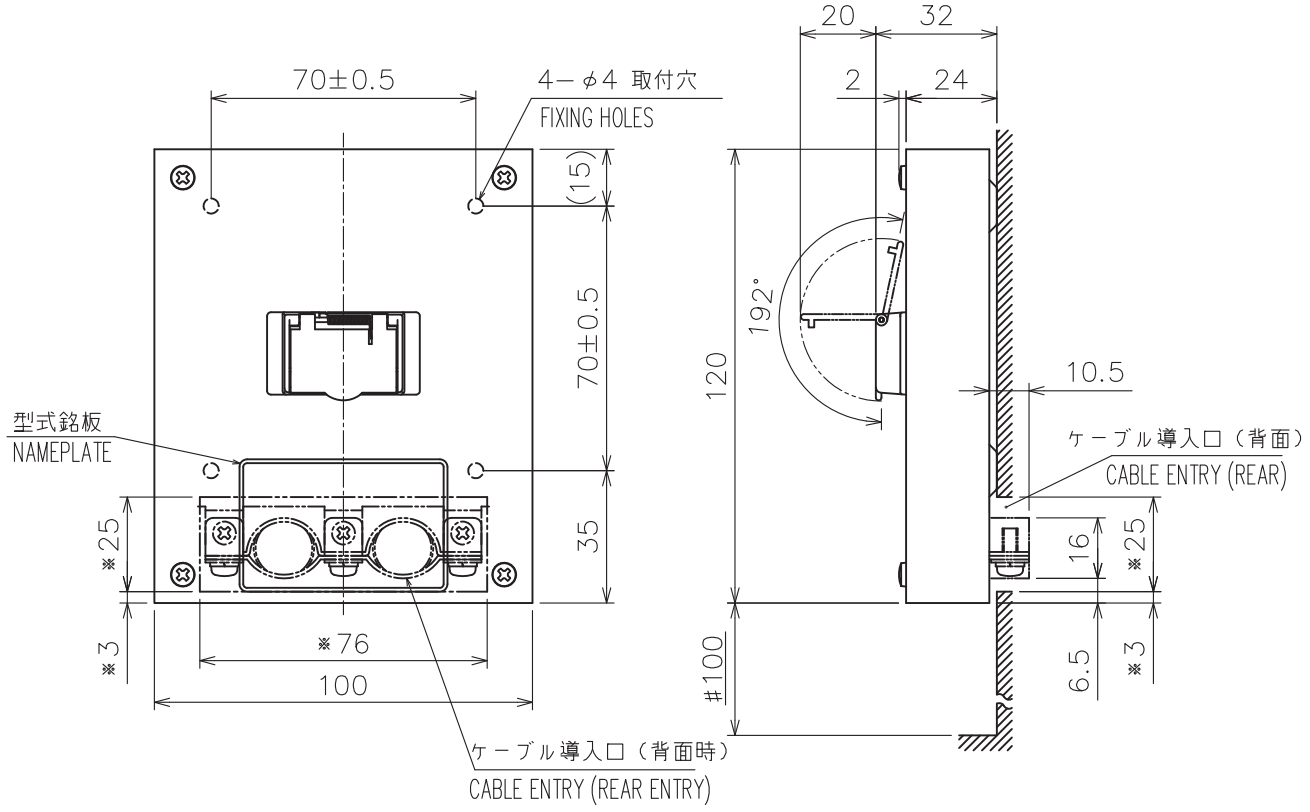

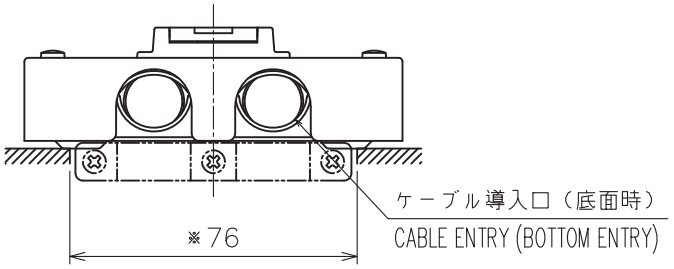

注　記

１）指定外の寸法公差は表１による。
２）#印寸法は最小サービス空間寸法とする。
３）取付用ネジはタッピンネジ呼び径３×１０を使用のこと。
４）※印寸法は、ケーブルを背面から導入時に設ける穴の寸法

NOTE

1. TABLE 1 INDICATES TOLERANCE OF DIMESIONS WHICH IS NOT SPECIFIED.
2. #: MINIMUM SERVICE CLEARANCE.
3. USE TAPPING SCREWS φ3x10 FOR FIXING THE UNIT.
4. ※: CUTOUT DIMENSIONS FOR REAR CABLE ENTRY.

表１ TABLE 1

寸法区分（ｍｍ）DIMENSION	公差（ｍｍ）TOLERANCE
Ｌ≦５０	±１．５
５０<Ｌ≦１００	±２．５
１００<Ｌ≦５００	±３

DRAWN 5/Oct/2010 T.YAMASAKI			TITLE IC-307
CHECKED 5/Oct/2010 T.TAKAHASHI			名称 保安警報発呼器（壁掛装備）
APPROVED 6/Oct/2010 Y. NISHIYAMA	FELCOM 12/15/16		外寸図
SCALE 1/2	MASS 0.35 ±10% kg		NAME SSAS ALERT UNIT (BULKHEAD MOUNT)
DWG.No. C5635-G10- C	REF.No. 16-018-700G-3		OUTLINE DRAWING

FURUNO

表１ TABLE 1

寸法区分（ｍｍ） DIMENSION	公差（ｍｍ） TOLERANCE
L≦50	±1.5
50<L≦100	±2.5
100<L≦500	±3

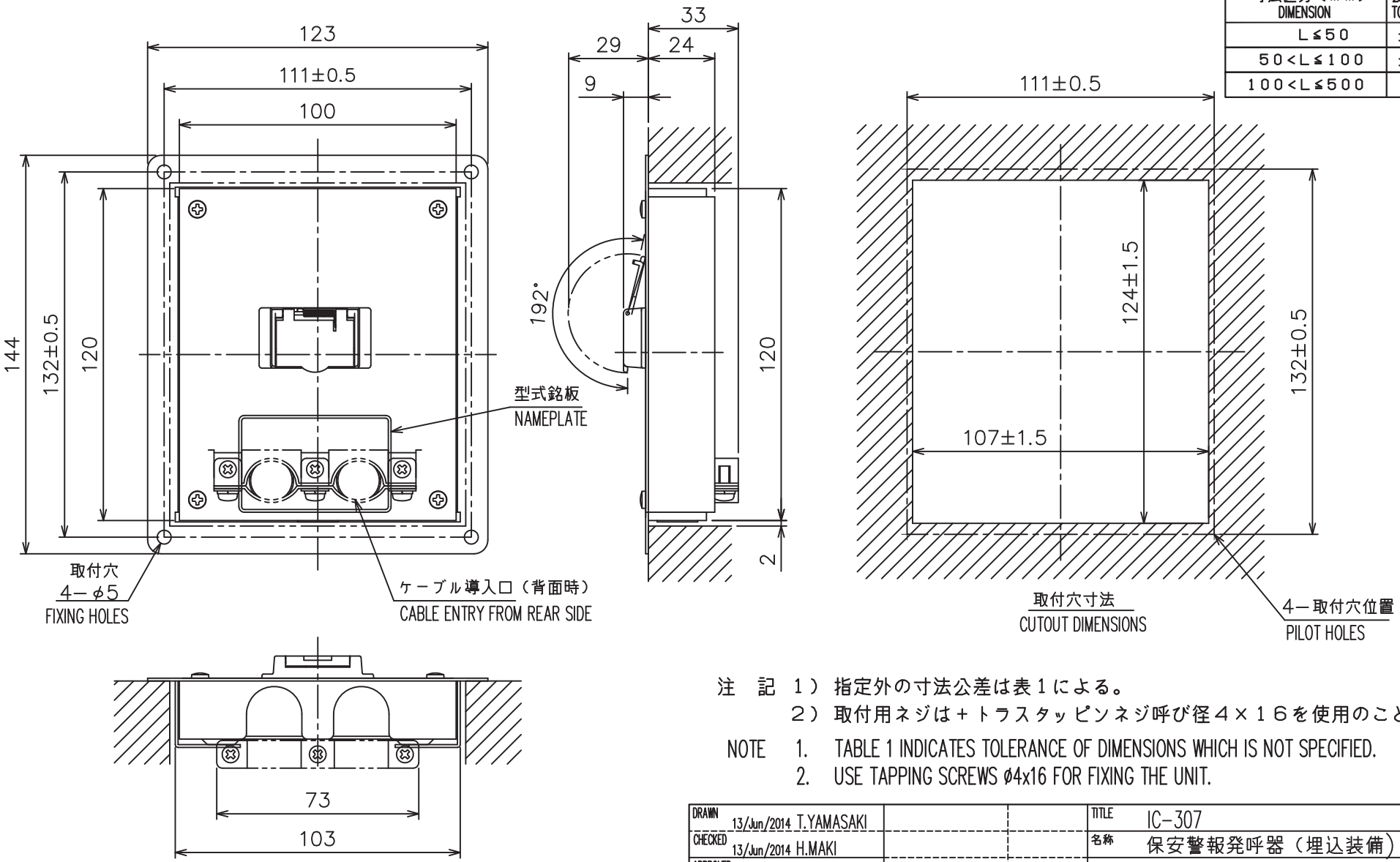

注　記　１）指定外の寸法公差は表１による。
　　２）取付用ネジは＋トラスタッピンネジ呼び径４×１６を使用のこと。

NOTE　1. TABLE 1 INDICATES TOLERANCE OF DIMENSIONS WHICH IS NOT SPECIFIED.
　　2. USE TAPPING SCREWS ø4x16 FOR FIXING THE UNIT.

DRAWN 13/Jun/2014 T.YAMASAKI			TITLE IC-307
CHECKED 13/Jun/2014 H.MAKI			名称 保安警報発呼器（埋込装備）
APPROVED 16/Jun/2014 H.MAKI	FELCOM 12/15/16		外寸図
SCALE 1/2	MASS 0.5 ±10% kg		NAME SSAS ALERT UNIT (FLUSH MOUNT)
DWG. No. C5635-G11-B	REF. No. 16-018-710G-1		OUTLINE DRAWING

FURUNO ELECTRIC CO., LTD.

FURUNO

表1 TABLE 1

寸法区分（mm） DIMENSION	公差（mm） TOLERANCE
L≦50	±1.5
50<L≦100	±2.5
100<L≦500	±3

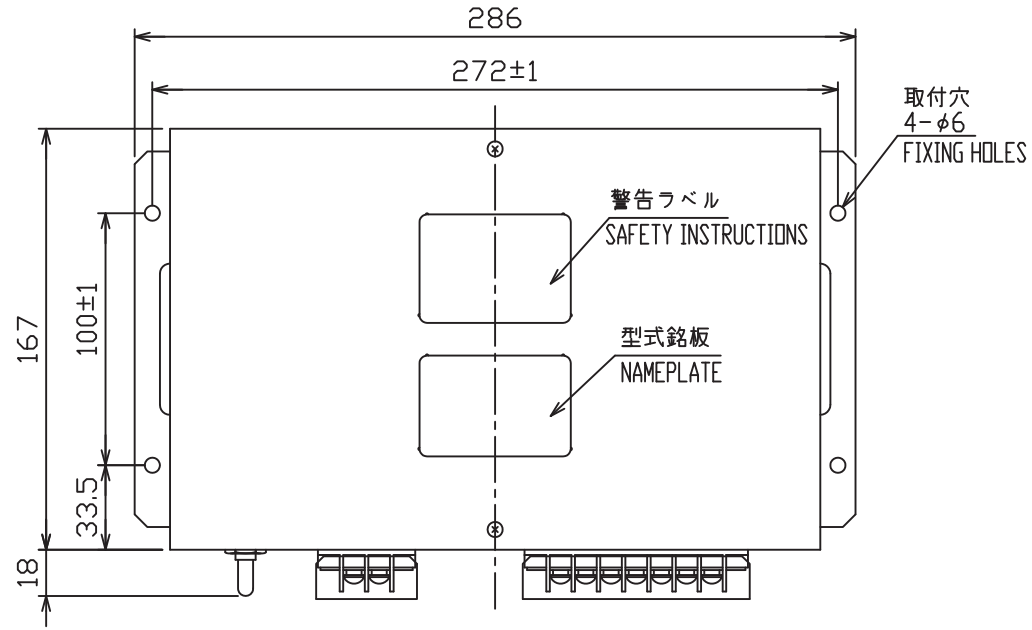

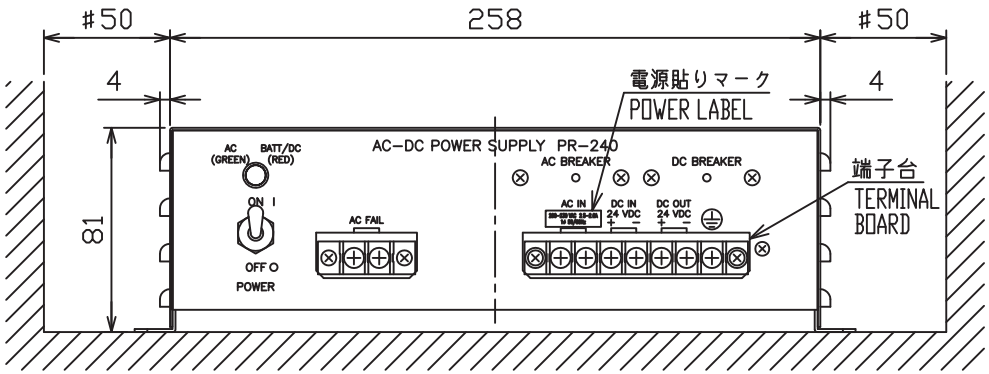

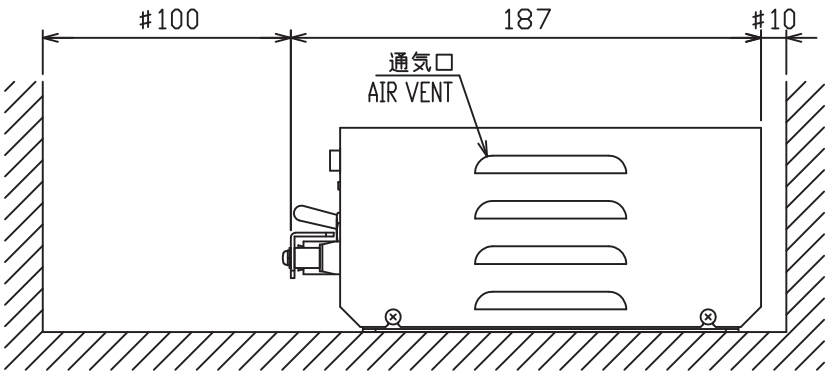

注　記　1）指定なき寸法公差は表1による。
　　2）#印寸法は最小サービス空間寸法とする。
　　3）取付用ネジは＋トラスタッピンネジ 呼び径4×16を使用のこと。

NOTE　1. TABLE 1 INDICATES TOLERANCE OF DIMENSIONS WHICH IS NOT SPECIFIED.
　　2. #: MINIMUM SERVICE CLEARANCE.
　　3. USE TAPPING SCREWS φ4x16 FOR FIXING THE UNIT.

DRAWN 25/Sep/09 T.YAMASAKI			TITLE PR-240
CHECKED 25/Sep/09 T.TAKENO			名称 AC/DC電源ユニット
APPROVED 26/Oct/09 R.Esumi			外寸図
SCALE 1/3	MASS 3.2 ±10% kg		NAME AC/DC POWER SUPPLY UNIT
DWG No. C5003-G03- J		REF. No. 24-003-500G-4	OUTLINE DRAWING

D-11

FURUNO ELECTRIC CO., LTD.

FURUNO

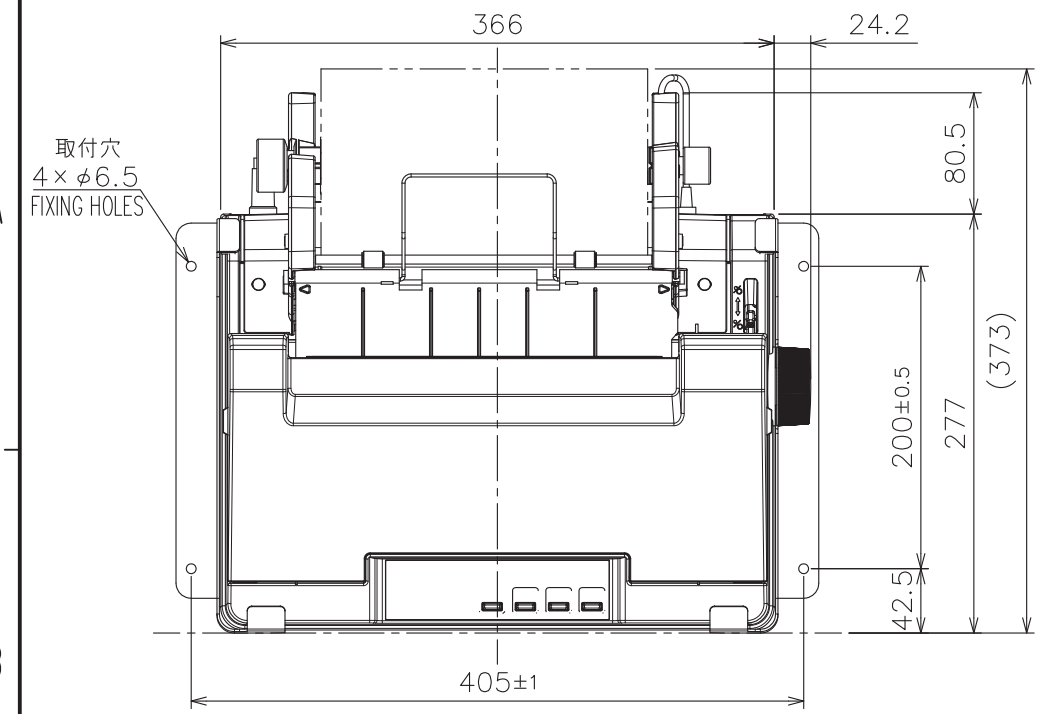

表1 TABLE 1

寸法区分（mm） DIMENSION	公差（mm） TOLERANCE
L≦50	±1.5
50<L≦100	±2.5
100<L≦500	±3

注 記 1） 指定外の寸法公差は表１による。
2） #印寸法は最小サービス空間寸法とする。
3） 取付用ネジはトラスタッピンネジ呼び径５×２０を使用のこと。

NOTE 1. TABLE 1 INDICATES TOLERANCE OF DIMENSIONS WHICH IS NOT SPECIFIED.
2. #: MINIMUM SERVICE CLEARANCE.
3. USE TAPPING SCREWS φ5x20 FOR FIXING THE UNIT.

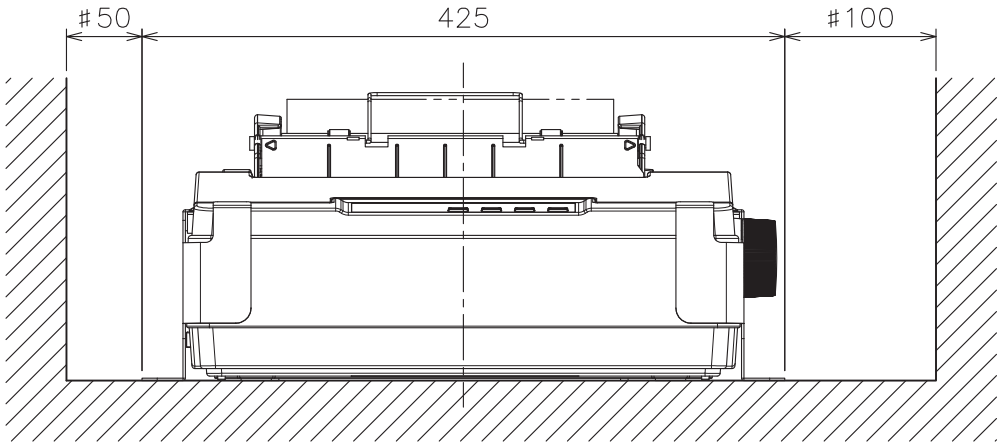

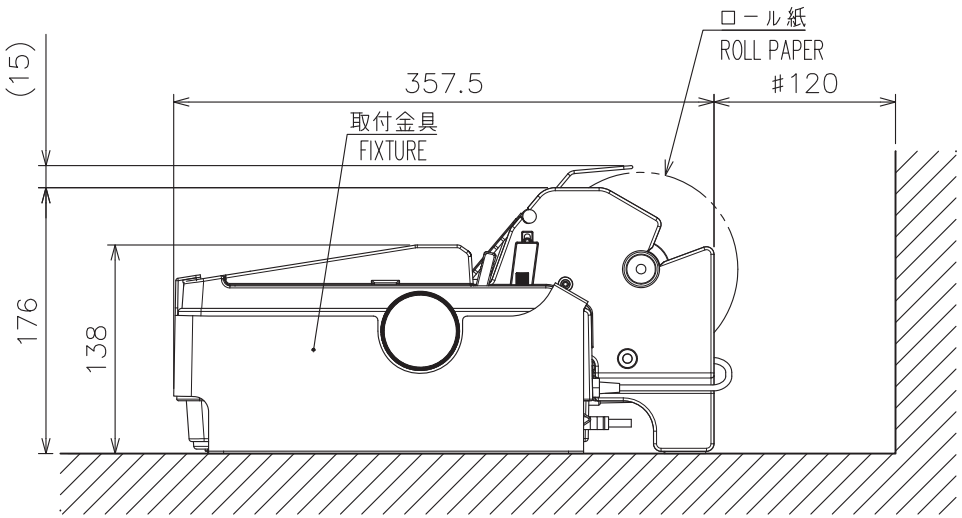

DRAWN 6/Jul/2012 T.YAMASAKI			TITLE PP-520
CHECKED 6/Jul/2012 H.MAKI			名称 プリンタ
APPROVED 6/Jul/2012 Y.NISHIYAMA			外寸図
SCALE 1/5	MASS 5.5 ±10% kg	質量はロール紙を含まず MASS DOES NOT INCLUDE ROLL PAPER	NAME PRINTER
DWG.No. C5080-G02- A		REF.No. 16-023-551G-1	OUTLINE DRAWING

FURUNO ELECTRIC CO., LTD.

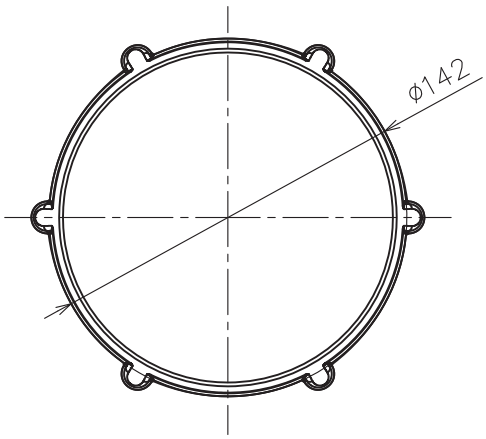

表２ 工事材料　TABLE 2 INSTALLATION MATERIAL

品番 ITEM	品 名 NAME	図番 DWG. No.	摘要 REMARK
1	アンテナ取付パイプ ANTENNA MOUNTING PIPE	16−018−1301	0.3 kg APPROX.
2	ロックナット LOCK NUT	16−023−2518	
3	ナットシート NUT SHEET	16−023−2519	

表１ TABLE 1

寸法区分（ｍｍ） DIMENSION	公差（ｍｍ） TOLERANCE
Ｌ≦５０	±１．５
５０<Ｌ≦１００	±２．５
１００<Ｌ≦５００	±３

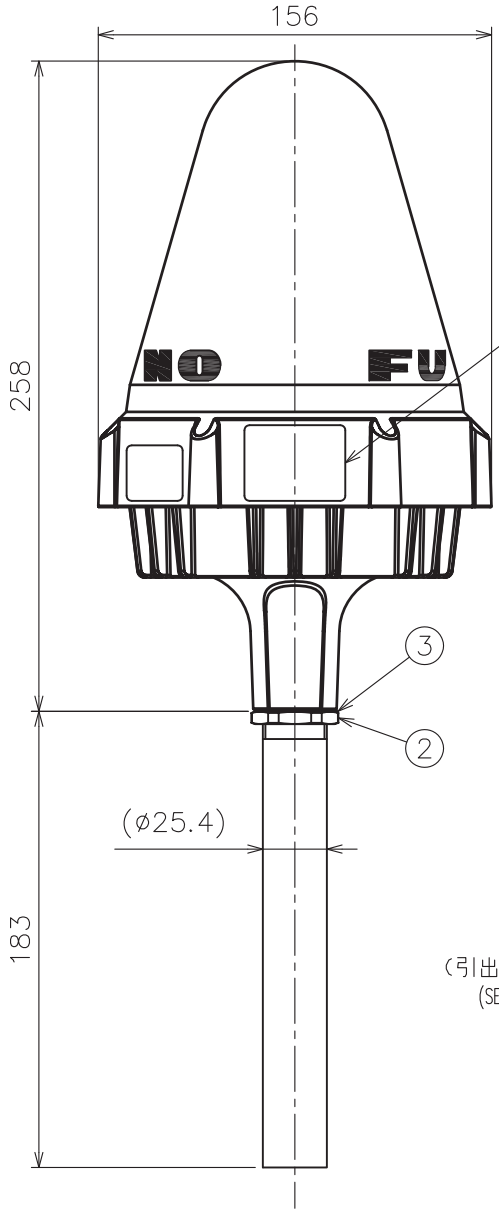

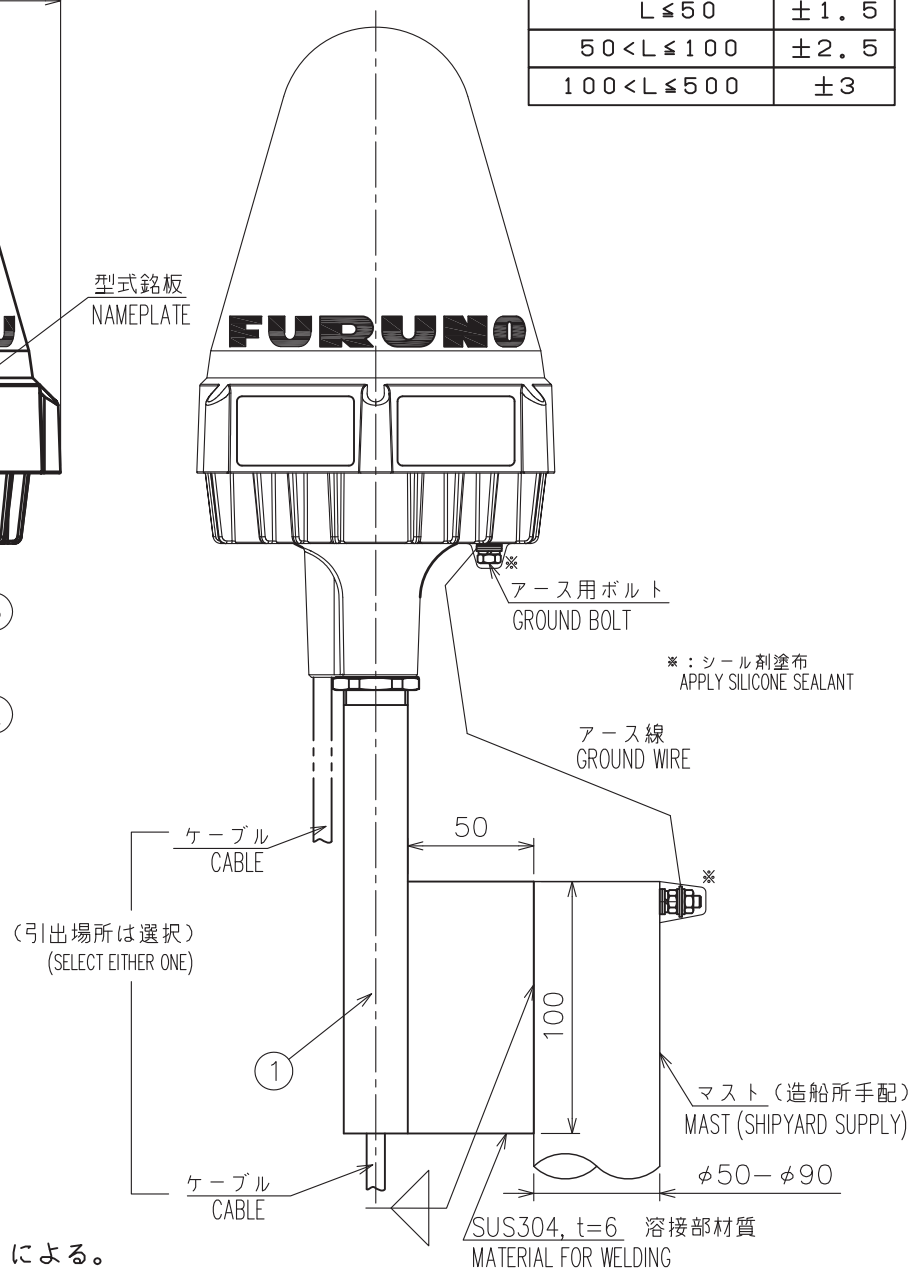

注 記　１）指定外の寸法公差は表１による。

NOTE　1.　TABLE 1 INDICATES TOLERANCE OF DIMENSIONS WHICH IS NOT SPECIFIED.

DRAWN 17/May/2012 T.YAMASAKI		TITLE	IC−115/116/118/119
CHECKED 17/May/2012 H.MAKI		名称	アンテナユニット
APPROVED 17/May/2012 Y.NISHIYAMA	FELCOM 15/16/18/19		外寸図
SCALE 1/3	MASS 1.4 ±10% kg　質量はパイプ工材を含まず。MASS W/O MOUNTING PIPE.	NAME	ANTENNA UNIT
DWG. No. C5635−G01− H	REF. No. 16−023−250G−1		OUTLINE DRAWING

表1 TABLE 1

寸法区分（mm） DIMENSION	公差（mm） TOLERANCE
L≦50	±1.5
50<L≦100	±2.5
100<L≦500	±3

表2 工事材料
TABLE 2 INSTALLATION MATERIAL

品番 ITEM	品 名 NAME	図番 DWG. No.
1	ロックナット LOCK NUT	16-023-2518
2	ナットシート NUT SHEET	16-023-2519

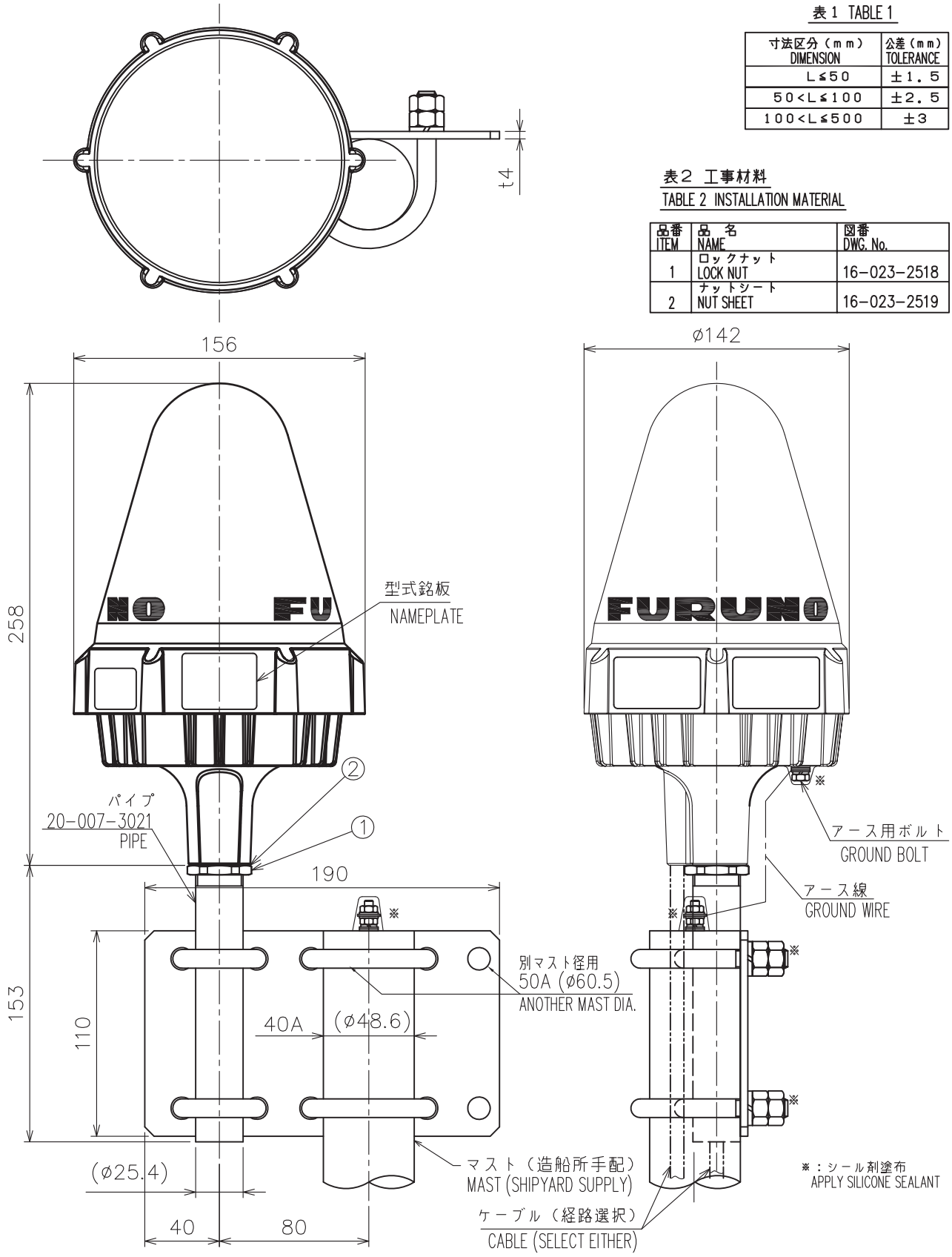

注 記　1）指定外の寸法公差は表1による。

NOTE　1.　TABLE 1 INDICATES TOLERANCE OF DIMENSIONS WHICH IS NOT SPECIFIED.

DRAWN 25/Apr/2012 T.YAMASAKI			TITLE IC-115/116/118/119
CHECKED 25/Apr/2012 H.MAKI			名称 アンテナユニット（取付板）
APPROVED 30/Apr/2012 Y.NISHIYAMA		FELCOM 15/16/18/19	外寸図
SCALE 1/3	MASS 2.3 ±10% kg	質量は工材を含む。 MASS INCLUDES INSTALLATION MATERIALS.	NAME ANTENNA UNIT (W/ FIXTURE PLATE)
DWG. No. C5635-G19- D		REF. No. 16-023-252G-1	OUTLINE DRAWING

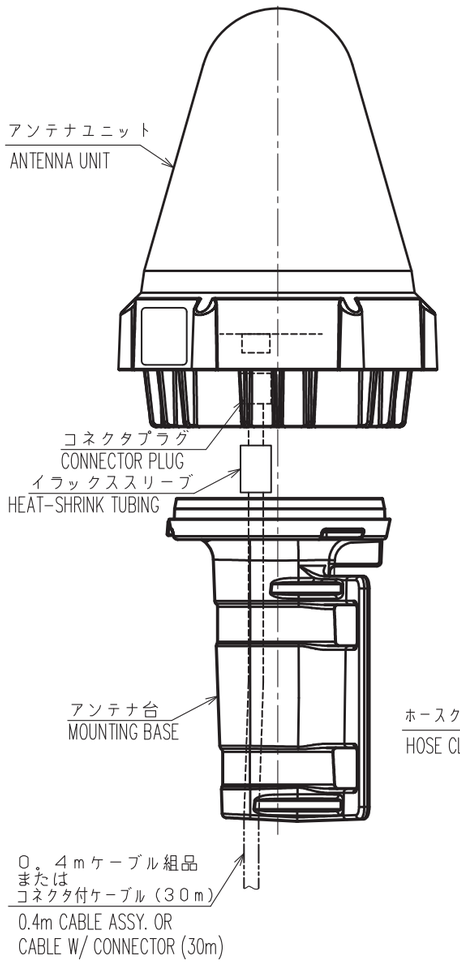

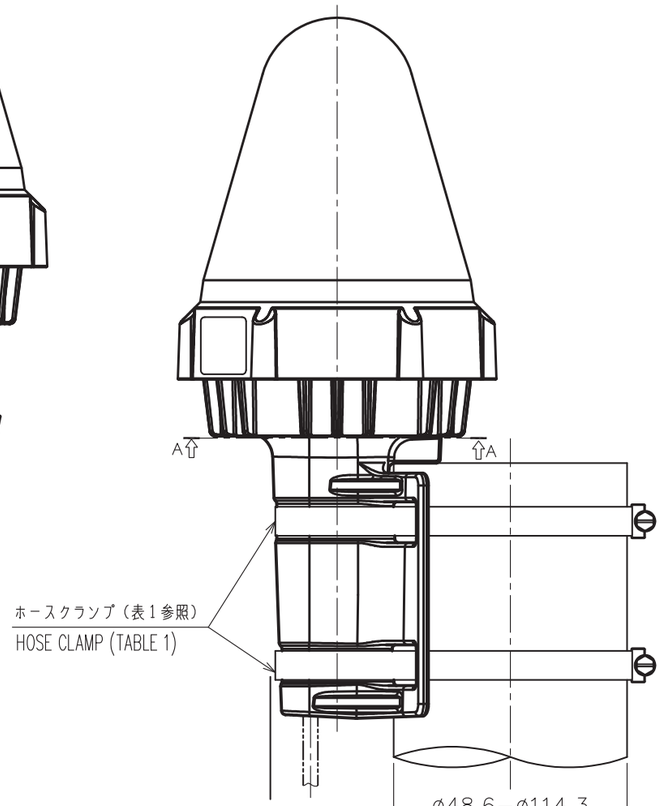

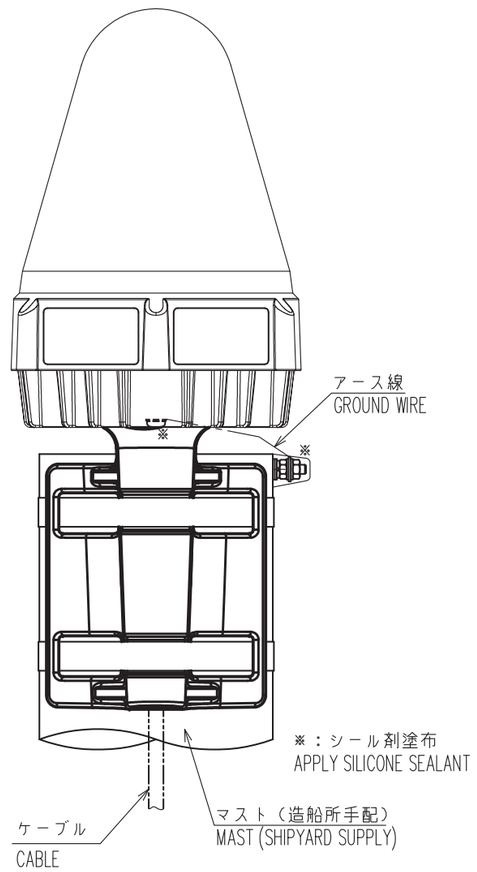

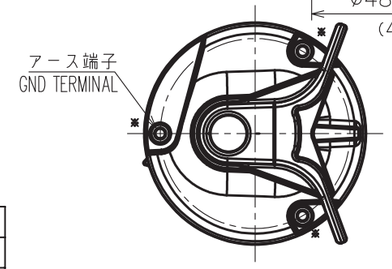

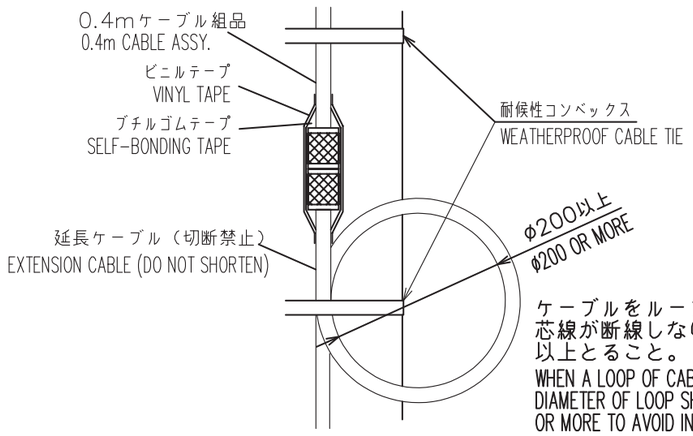

ケーブルをループ状に巻くときは
芯線が断線しないようにø200mm
以上とること。
WHEN A LOOP OF CABLE IS FORMED,
DIAMETER OF LOOP SHOULD BE ø200mm
OR MORE TO AVOID INJURY FROM STRESS.

表1 ホースクランプ（オプション）
TABLE 1 HOSE CLAMP (OPTION)

TYPE	MODEL	CODE No.	DIA. OF MAST
77-95	OP16-76-1	001443450	ø48.6 (40A)
104-138	OP16-76-2	001443460	ø76.3-89.1 (65A-80A)
130-165	OP16-76-3	001443470	ø101.6-114.3 (90A-100A)

手順

1）０．４ｍケーブル組品を使用するときは、コネクタプラグを
アンテナ上部底のコネクタに接続した後、ケーブルの下から
イラックススリーブを通しておく。
０．４ｍケーブル組品を使用しないときは、アンテナ台の下
から３０ｍケーブルを通し、イラックススリーブを通して
コネクタプラグをアンテナ上部底のコネクタに接続する。
2）イラックススリーブを熱で固着し（110℃以下）、自己融着
テープおよびビニルテープで固定する。
固定範囲は５０ｍｍ以内。高温で熱すると部材の一部を変形
させる恐れがあるので注意する。
3）アンテナ台をアンテナ上部にネジ３本で固定する。
うち一本のネジは、アース線（圧着端子付）を共締めする。
4）アンテナ台のネジ部にシール剤を塗布する。
5）アンテナ台をホースクランプ2本でマストに固定する。
6）０．４ｍケーブル組品を使用するときは、がい装付ケーブルの
コネクタを接続し、自己融着テープ、ビニルテープで固定する。
7）ケーブルをマストに固定し、アース線をマストに接続する。
ケーブルは耐候性コンベックスで固定する。
8）※部分をシール剤で完全に覆う。

PROCEDURE

1. FOR CONNECTION OF CABLE ASSY.(0.4m)
CONNECT THE CONNECTOR PLUG OF CABLE ASSY. TO ANTENNA UNIT.
THEN PASS HEAT-SHRINK TUBING FROM THE OTHER SIDE OF CABLE ASSY.
FOR CONNECTION OF CABLE W/ CONNECTOR (30m).
PASS THE ANTENNA CABLE THRU THE HOLE IN THE CENTER OF THE ANTENNA BASE. THEN PASS HEAT-SHRINK TUBING ONTO THE CABLE.
CONNECT THE CABLE PLUG TO ANTENNA UNIT.
2. FIX THE SHRINK TUBE WITH HEAT (+110°C OR LESS) AND BIND WITH SELF-BONDING TAPE AND VINYL TAPE.
WRAPPING LENGTH: WITHIN 50 mm. DO NOT HEAT WITH HIGH TEMPERATURE TO AVOID DISTORTION OF ANTENNA PARTS.
3. FIX THE MOUNTING BASE TO ANTENNA UNIT WITH 3 SCREWS.
FASTEN THE GROUND WIRE TO A SCREW OF THEM WITH CRIMP-ON LUG.
4. APPLY SILICONE SEALANT TO SCREWS OF MOUNTING BASE.
5. FIX THE MOUNTING BASE TO MAST WITH TWO HOSE CLAMPS SECURELY.
6. CONNECT THE ARMARED CABLE CONNECTOR TO THE CABLE ASSY.
WRAP THE CONNECTORS WITH SELF-BONDING TAPE AND VINYL TAPE.
7. FIX THE ANTENNA CABLE WITH WEATHERPROOF CABLE TIES AND CONNECT GROUND WIRE TO MAST.
8. COVER SCREW HEADS MARKED '※' WITH SILICONE SEALANT.

DRAWN 18/Feb/2016 T.YAMASAKI		TITLE	IC-115/116/118/119
CHECKED 18/Feb/2016 H.MAKI		名称	アンテナユニット（ホースクランプ取付）
APPROVED 22/Feb/2016 H.MAKI	FELCOM 15/16/18/19		装備要領
SCALE / MASS ±10% kg		NAME	ANTENNA UNIT (HOSE CLAMP FIXING)
DWG.No. C5674-Y01- C			INSTALLATION PROCEDURE

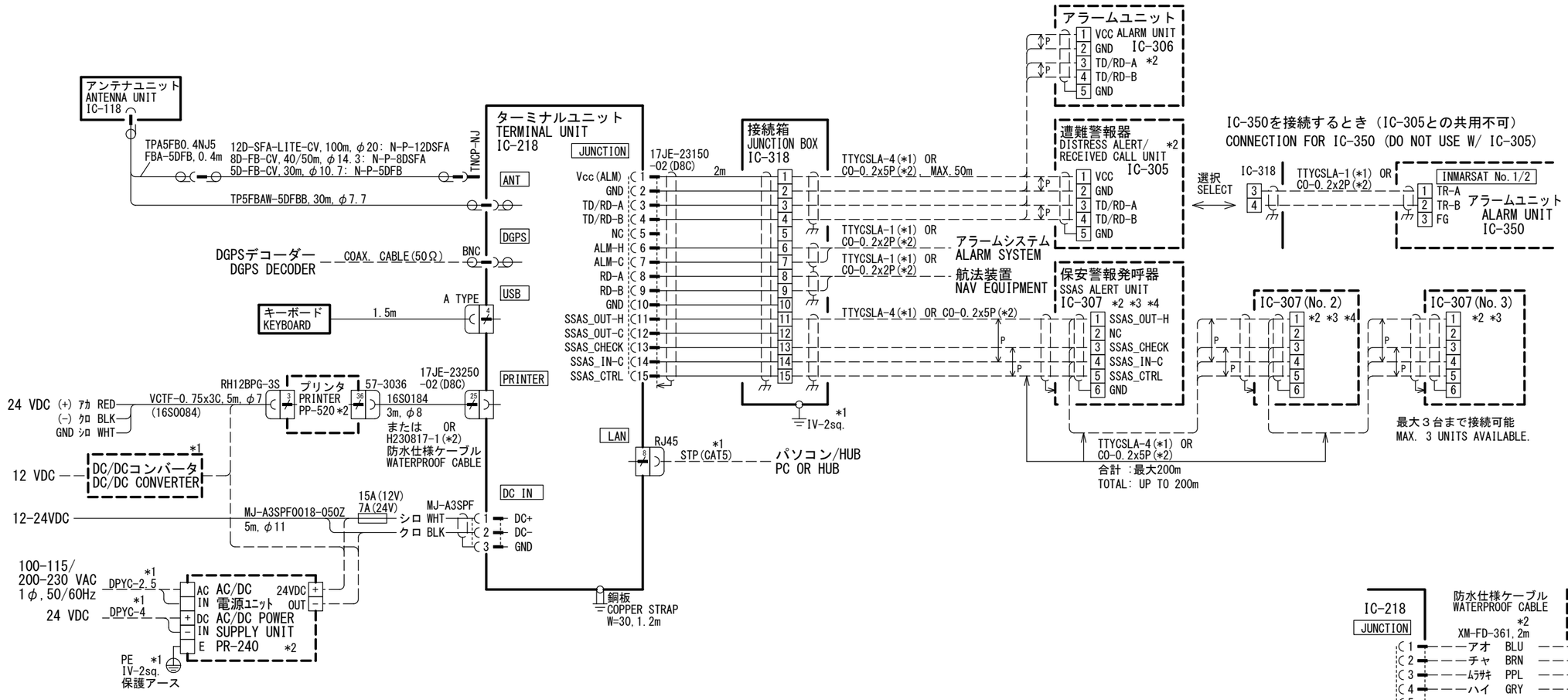

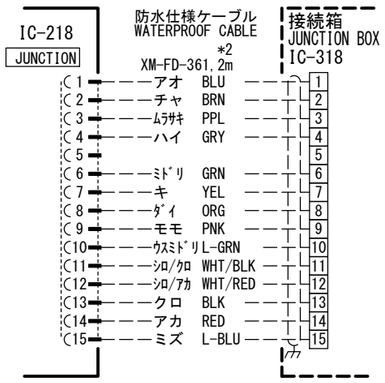

注記
＊１）造船所手配。
＊２）オプション。
＊３）終端のIC-307はジャンパー設定を変更する。
＊４）SSAS仕様のとき標準構成。

NOTE
*1: SHIPYARD SUPPLY.
*2: OPTION.
*3: CHANGE SETTING OF JUMPER IN IC-307 TO TERMINATE.
*4: STANDARD CONFIGURATION FOR SSAS.

CO-0.2x2P: CO-SPEVV-SB-C 0.2x2P, φ10.5
CO-0.2x5P: CO-SPEVV-SB-C 0.2x5P, φ13.5

DRAWN 1/Feb/2019 T.YAMASAKI		TITLE	FELCOM 18
CHECKED 1/Feb/2019 H.MAKI		名称	インマルサット-C 船舶地球局
APPROVED 6/Feb/2019 H.MAKI			相互結線図
SCALE / MASS kg		NAME	INMARSAT-C MES
DWG No. C5674-C01- H	REF. No. 16-023-3001-1		INTERCONNECTION DIAGRAM