FCV585 Dimensional Drawings

FCV585 Display Unit
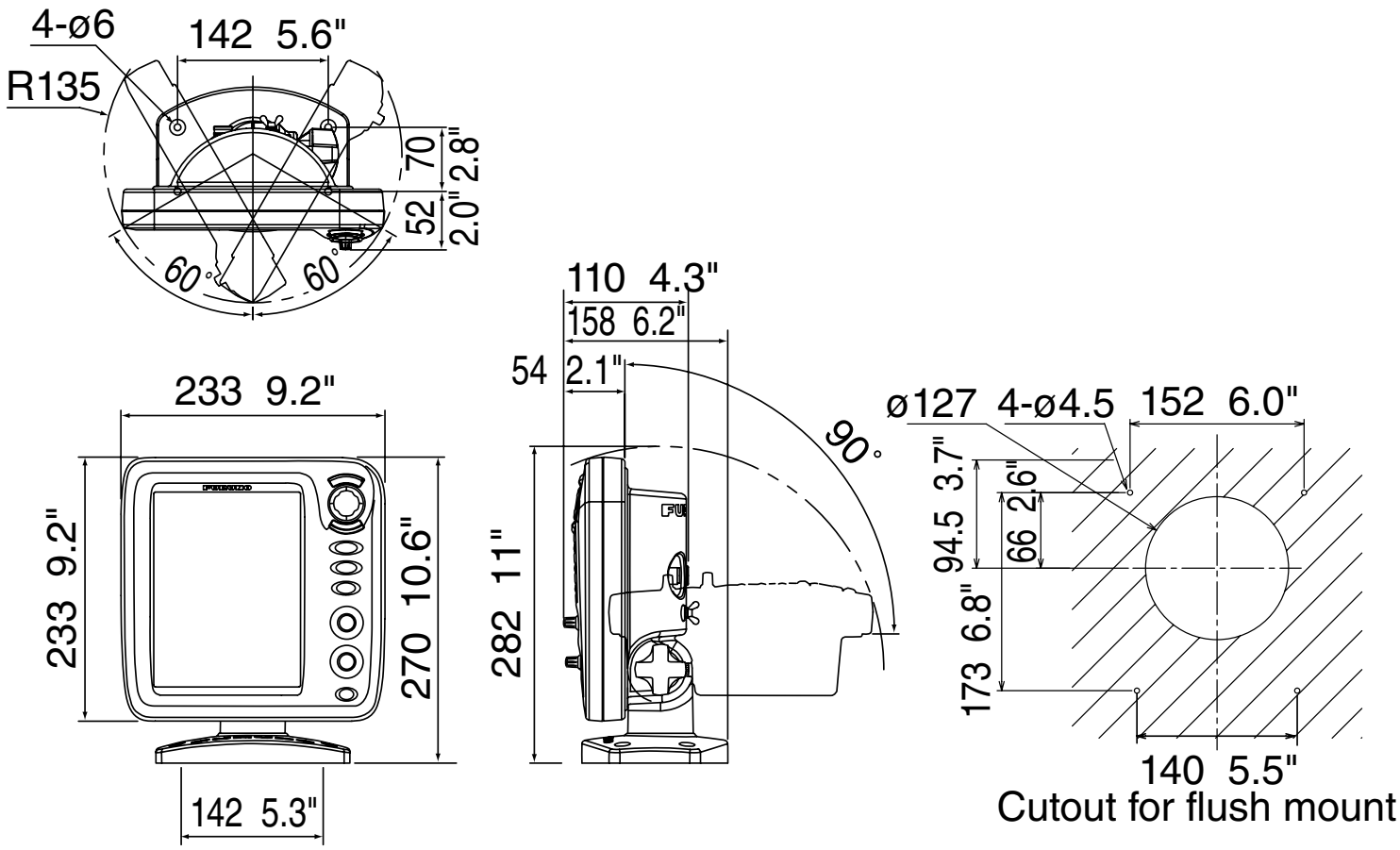
Bracket Mount 2.2 kg 4.9 lb
Flush Mount 1.5 kg 3.3 lb