DFF3 Dimensional Drawings:
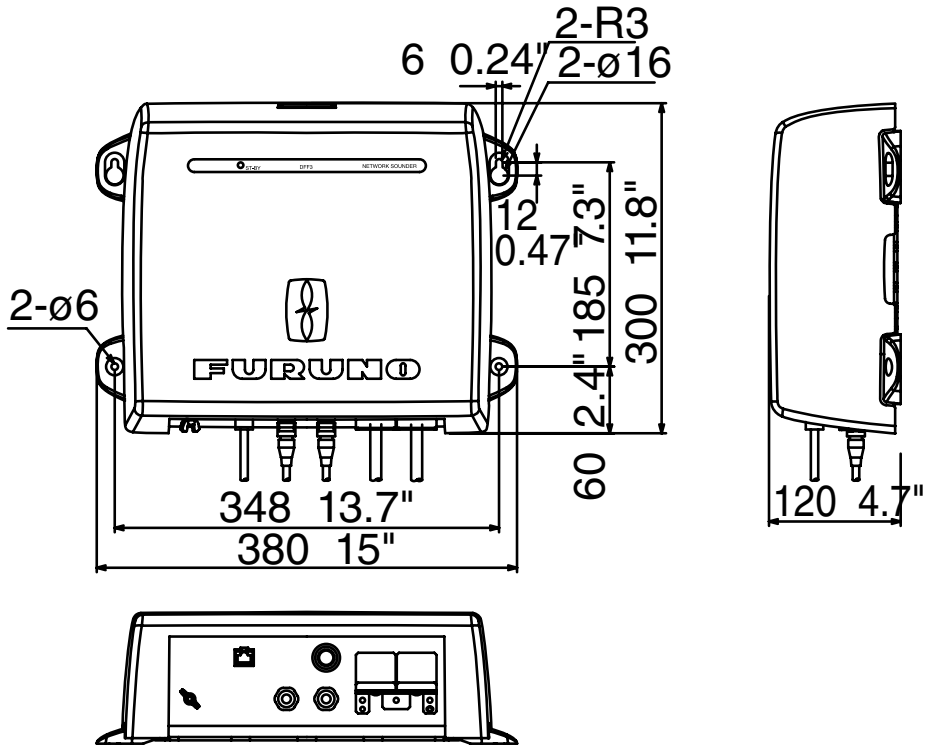
Network Fish Finder DFF3 3.8 kg 8.4 lb