1623 Radar Dimensional Drawings

Model 1623 Display Unit — 1.3 kg 2.9 lb

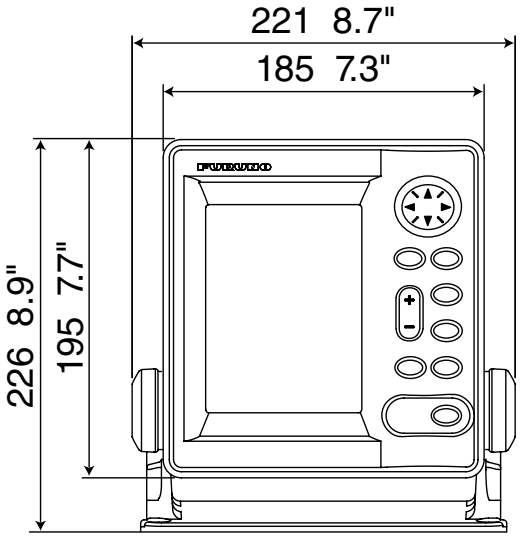

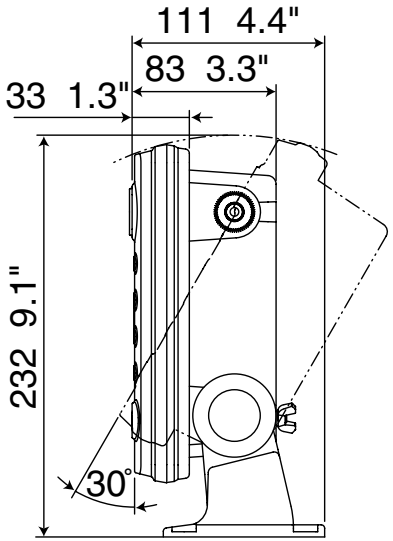

Model 1623 Antenna — 4.6 kg 10.1 lb

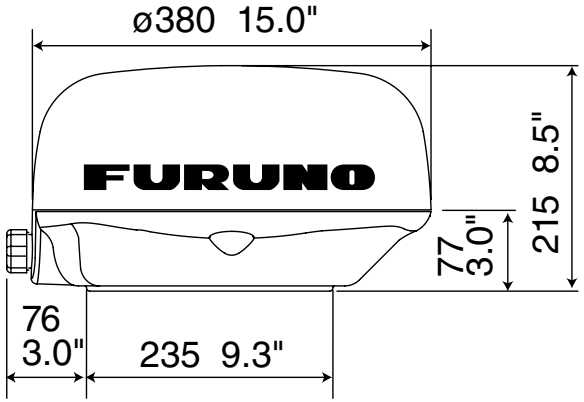
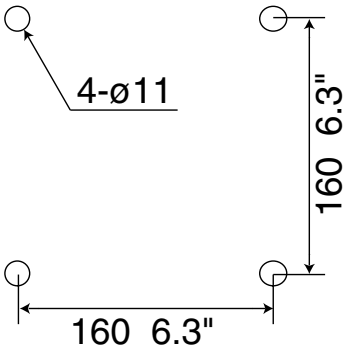
Fixing holes