LS4100 Dimensional Drawings

LS4100 Display Unit 0.7 kg 1.5 lb

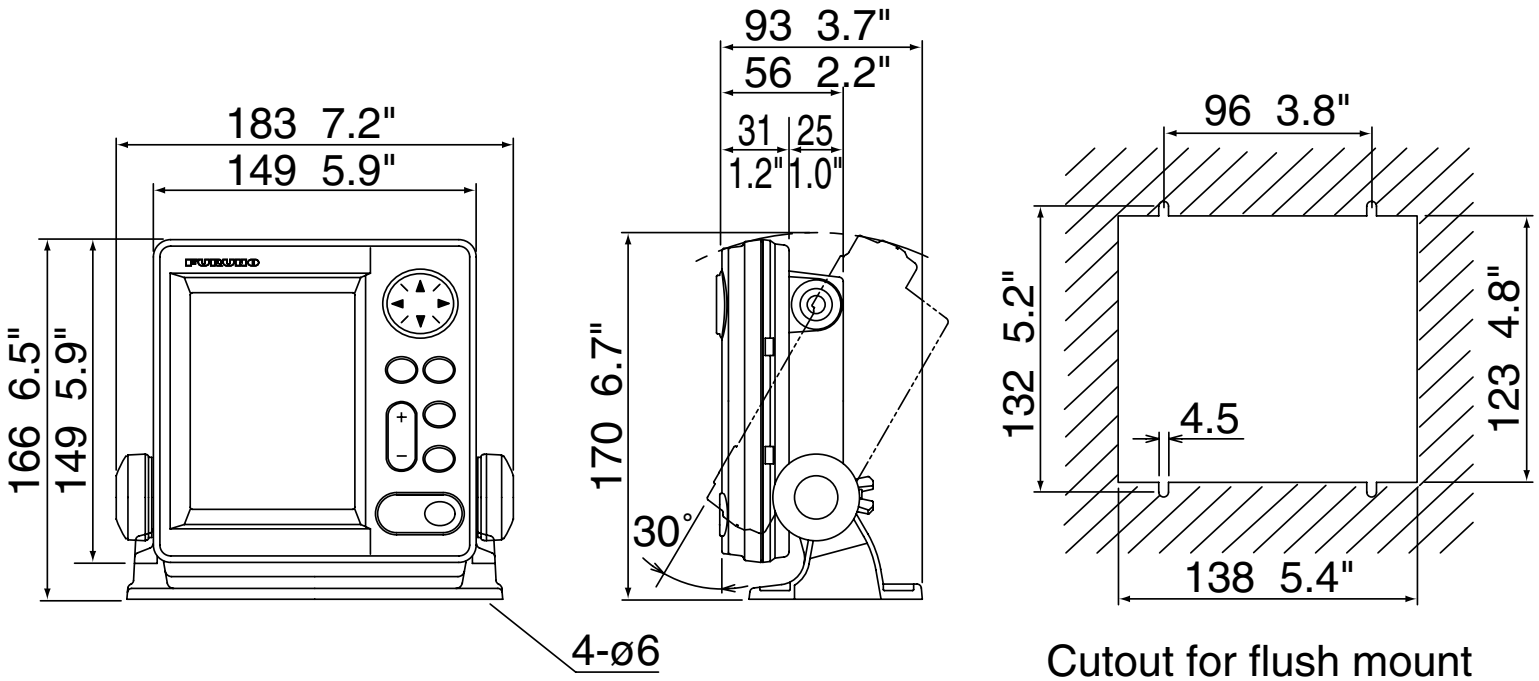

Cutout for flush mount