FM8800S Dimensional Drawings
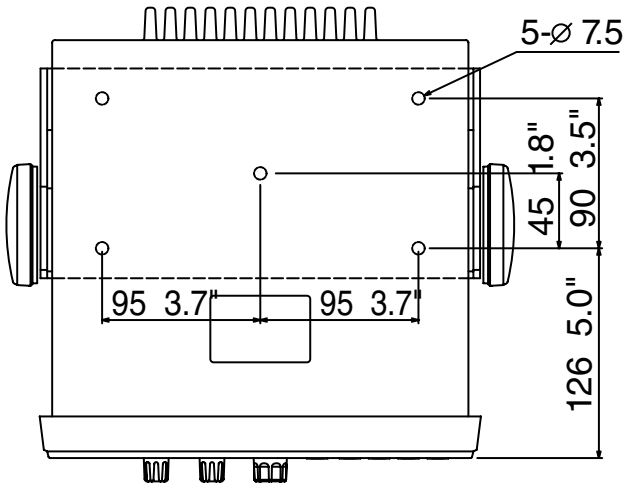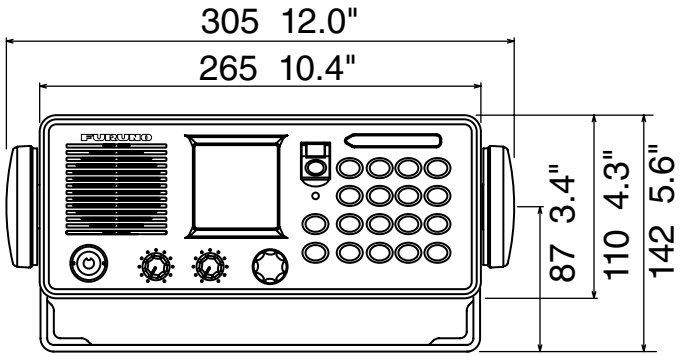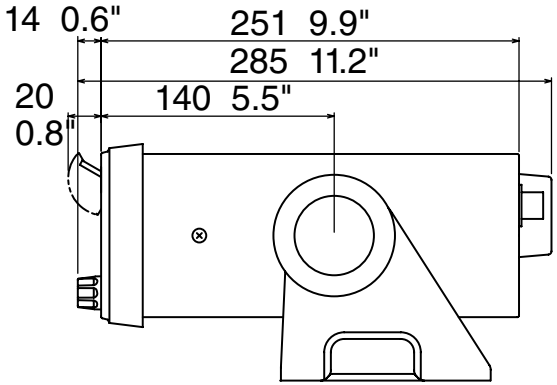
FM-8800S 5.5 kg 12.1lb