FM3000 Dimensional Drawings
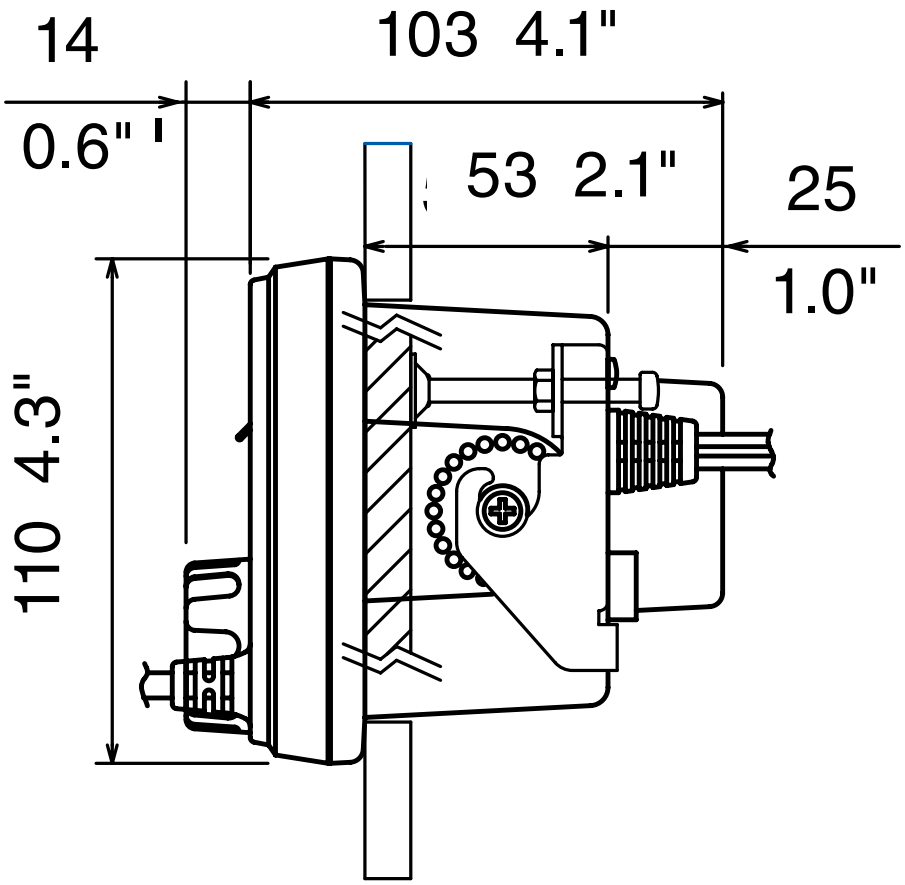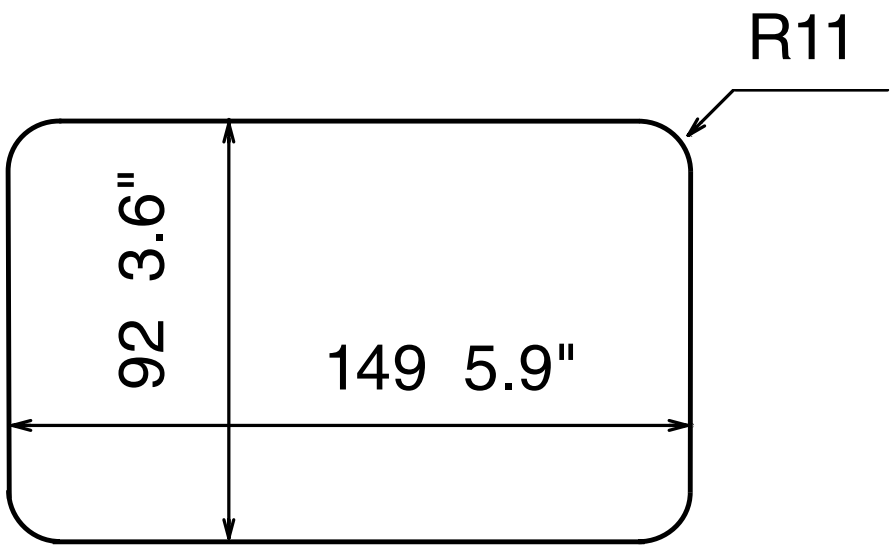
FM3000 2.5 kg 5.5 lb