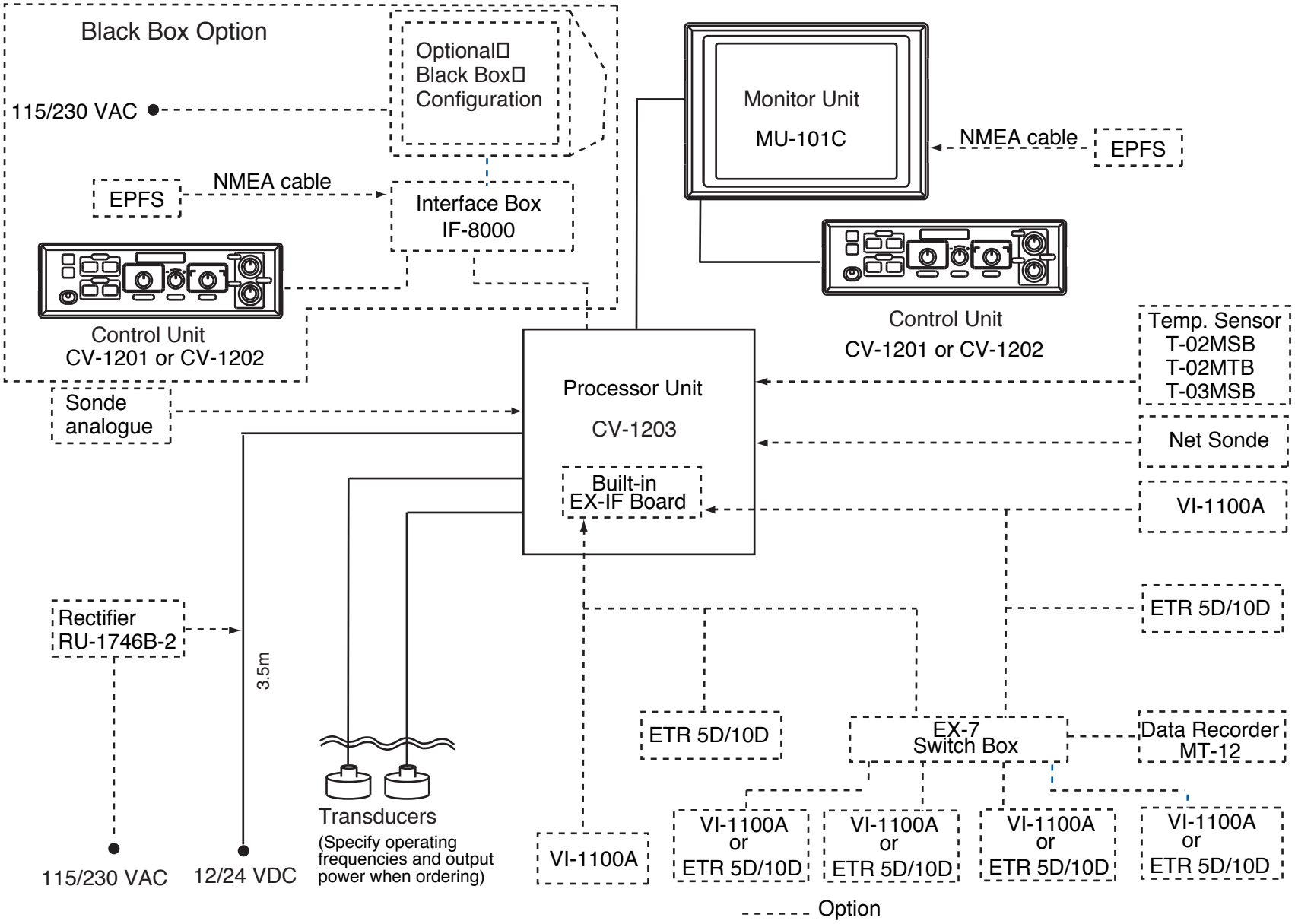FCV1200 Interface Diagram