FURUNO

TABLE 1

DIMENSIONS	TOLERANCE
L≤50	±1.5
50<L≤100	±2.5
100<L≤500	±3

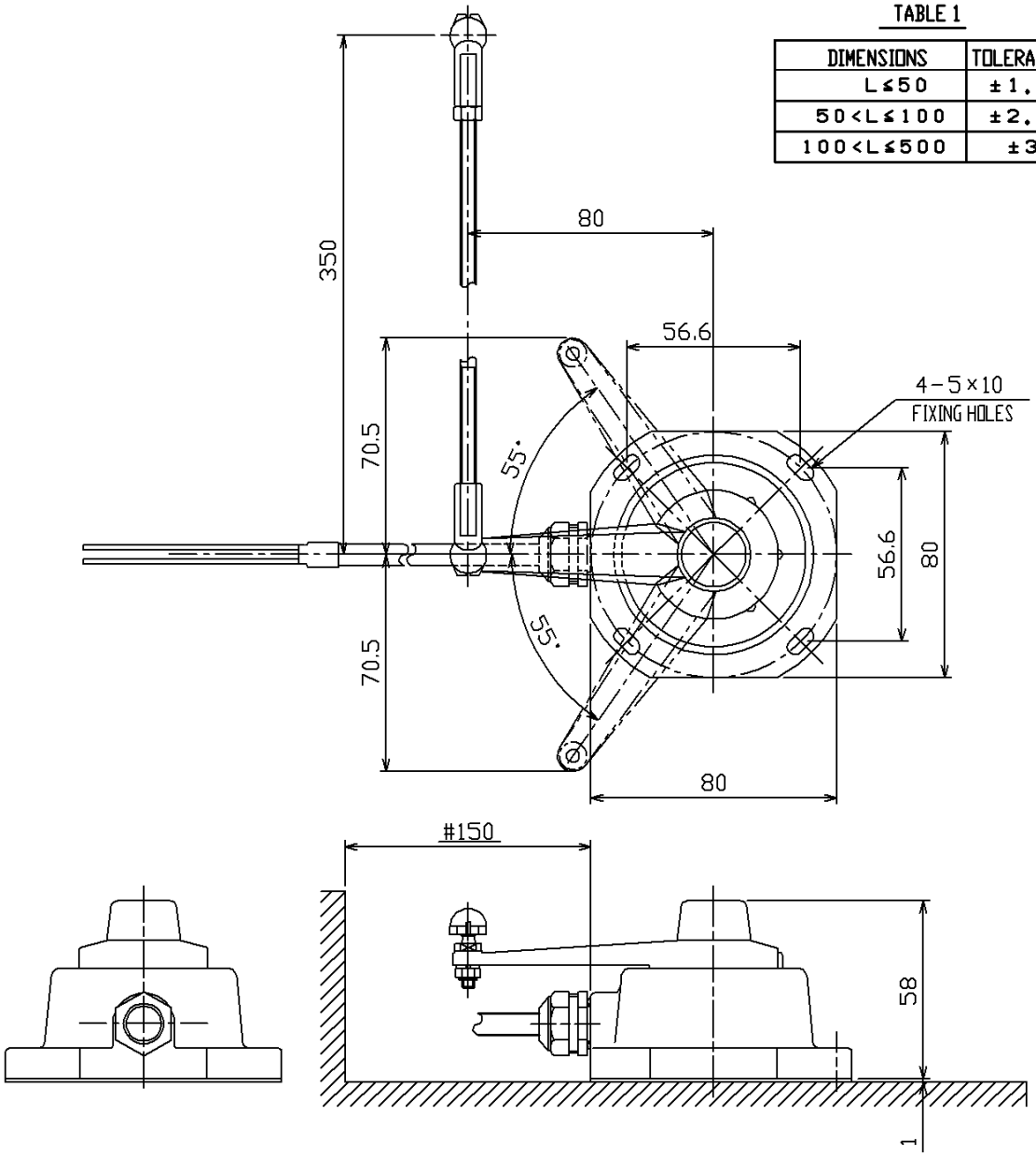

NOTE
1. #: MINIMUM SERVICE CLEARANCE.
2. TABLE 1 INDICATES TOLERANCE OF DIMENSIONS WHICH IS NOT SPECIFIED.
3. USE SELF-TAPPING SCREWS 4X20 FOR FIXING THE UNIT.
4. CABLE NOT INCLUDED IN MASS.

DRAWN	Apr. 14 '04 E. MIYOSHI		TITLE FAP-6111
CHECKED	TAKAHASHI. T		
APPROVED	Y. Hatai	Navpilot-500/511	
SCALE 1/2	MASS 0.19 ±10% kg		NAME RUDDER REFERENCE UNIT
DWG.No.	C7250-G04- B	64-024-420G-1	OUTLINE DRAWING

FURUNO ELECTRIC CO., LTD.