FURUNO

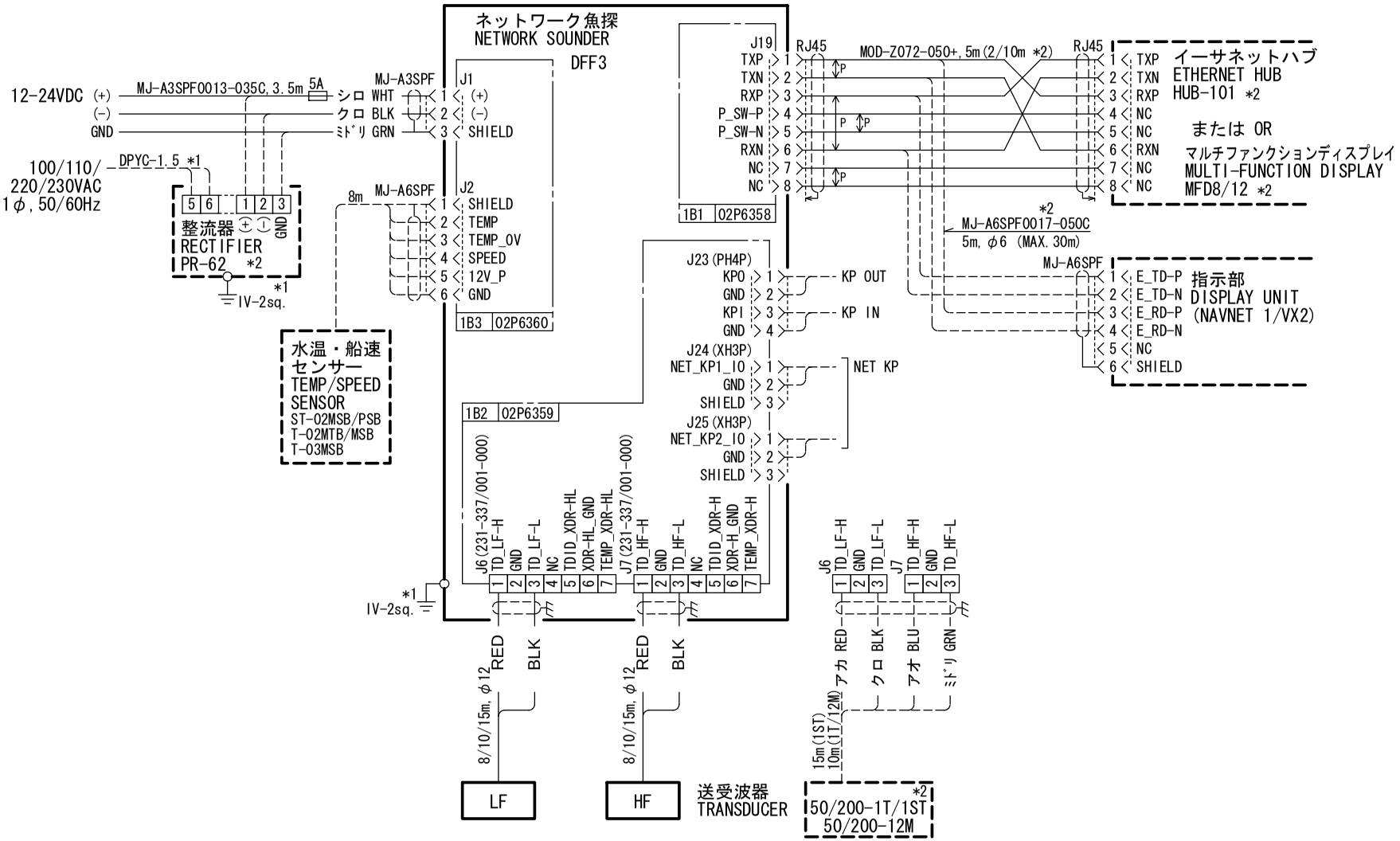


注記
＊１）造船所手配。
＊２）オプション。

NOTE
*1: SHIPYARD SUPPLY.
*2: OPTION.

| | | | |
|---|---|---|---|
| DRAWN Feb. 26 '08 T. YAMASAKI | | TITLE | DFF3 |
| CHECKED Feb. 27 '08 T. TAKENO | | 名 称 | ネットワーク魚探 |
| APPROVED 26/Mar/08 R. Esumi | | | 相互結線図 |
| SCALE / MASS kg | | NAME | NETWORK SOUNDER |
| DWG. No. C2037-C01- A | REF. No. 02-161-1001-0 | | INTERCONNECTION DIAGRAM |

FURUNO ELECTRIC CO., LTD.